Bonnet Creek Resort Community Development District

Agenda

September 7, 2023

AGENDA

Bonnet Creek Resort
Community Development District

219 East Livingston Street, Orlando, FL 32801
Phone: 407-841-5524 – Fax: 407-839-1526

August 31, 2023

Board of Supervisors
Bonnet Creek Resort
Community Development District

Dear Board Members:

The Board of Supervisors of the Bonnet Creek Resort Community Development District will meet Thursday, September 7, 2023, at 1:30 p.m. in the Bay Lake Boardroom at the JW Marriott Orlando Bonnet Creek Resort, 14900 Chelonia Parkway, Orlando, Florida. Following is the advance agenda for the meeting:

1. Roll Call
2. Public Comment Period
3. Approval of Minutes of the July 6, 2023 Board of Supervisors Meeting
4. Status Update of Chelonia Parkway Pavement Evaluation Report from PSI and Discussion of Contractor Proposal and Pricing
5. Public Hearing
    A. Consideration of Resolution 2023-08 Adopting the Fiscal Year 2024 Budget and Relating to the Annual Appropriations
    B. Consideration of Resolution 2023-09 Imposing Special Assessments and Certifying an Assessment Roll
6. Staff Reports
    A. Attorney
    B. Engineer
        i. Review and Acceptance of Annual Engineer's Report
        ii. Status of Entry Monument Project Completion
    C. District Manager's Report
        i. Consideration of Check Register
        ii. Balance Sheet and Income Statement
        iii. Approval of Fiscal Year 2024 Meeting Dates
    D. Field Manager's Report
        i. Consideration of Yellowstone Quotes for Juniper Replacement
        ii. Consideration of Quote for Additional Grasses and Fill Ins
        iii. Consideration of Highway Signage Shop Drawings
7. Supervisor's Requests
8. Other Business
9. Adjournment

Sincerely,

George Flint

George S. Flint
District Manager

Cc: Jan Carpenter, District Counsel
James Nugent, District Engineer
Darrin Mossing, GMS

MINUTES

MINUTES OF MEETING
BONNET CREEK RESORT
COMMUNITY DEVELOPMENT DISTRICT

The regular meeting of the Board of Supervisors of the Bonnet Creek Resort Community Development District was held Thursday, July 6, 2023 at 1:30 p.m. at the Hilton Bonnet Creek, 14100 Bonet Creek Resort Lane, Orlando, Florida.

Present and constituting a quorum were:

Randall Greene	Chairman
Fred Sawyers	Secretary
Herb Von Kluge	Assistant Secretary
Becky Frasier	Assistant Secretary
Richard Scinta	Assistant Secretary

Also present were:

George Flint	District Manager
Jan Carpenter	District Counsel
Jim Nugent	District Engineer
Clayton Smith	Field Manager

The following is a summary of the discussions and actions taken at the July 6, 2023 meeting. An audio copy of the proceedings can be obtained by contacting the District Manager.

FIRST ORDER OF BUSINESS **Roll Call**

Mr. Flint called the meeting to order and called the roll.

SECOND ORDER OF BUSINESS **Public Comment Period**

There being none, the next item followed.

THIRD ORDER OF BUSINESS **Approval of the Minutes of the June 1, 2023 Meeting**

> On MOTION by Mr. Sawyers seconded by Mr. Greene with all in favor the minutes of the June 1, 2023 meeting were approved, as presented.

FOURTH ORDER OF BUSINESS **Review and Acceptance of FY2022 Audit Report**

Mr. Flint stated Berger Tombs completed the audit and we sent to the State of Florida. The management letter indicates there are no current or prior year findings or recommendations and that we have complied with all the provisions of the auditor general that they are required to review. It is a clean audit.

> On MOTION by Mr. Greene seconded by Mr. Scinta with all in favor the Fiscal Year 2022 Audit Report was accepted and transmittal to the State of Florida was ratified.

FIFTH ORDER OF BUSINESS **Consideration of Revised Additional Service Agreement with Donald W. McIntosh Associates, Inc. Regarding Crosby Island Marsh Berm Repair**

Mr. Flint stated this is an additional services agreement with McIntosh Associates regarding the Crosby Island Marsh berm repair.

Mr. Nugent stated based on some of the erosion breaches that have occurred in the berm, we obtained this proposal for the survey work, plans and will work with J. Casper at Terracon.

Mr. Flint stated once the Geotech work is done, there will be another proposal that will follow this that will include construction administration and bidding services.

> On MOTION by Mr. Von Kluge seconded by Mr. Greene with all in favor the revised additional service agreement with Donald W. McIntosh Associates, Inc. regarding Crosby Island Marsh berm repair was approved.

SIXTH ORDER OF BUSINESS **Status Update of Chelonia Parkway Pavement Evaluation Report from PSI and Discussion of Contractor Scheduling**

Mr. Flint stated item six is regarding the Chelonia Parkway pavement project. The Board approved an agreement with PSI to do a Geotech analysis of the roadway to come up with recommendations on a scope of work for the repaving project. My understanding is the report should be received next week.

Mr. Nugent stated we have been working with Jan putting the contract documents together. We have spoken with Middlesex Paving who has continuing contracts with governmental agencies that were publicly bid that they provided to us. Once we receive the report from PSI with their recommendation to restore the pavement, we will share that with Middlesex and have them price it based on the most applicable rates in the county contract. It will save 60 days going through the bid process.

Mr. Flint stated the alternative is to go through a public bid process and that is probably eight weeks by the time it is advertised, receive the bids, evaluate them and present them to the Board. The concept of being able to piggyback on another government's contract is what we are looking at doing, as long as the other government has complied with the statutory bidding requirements. We wanted to be in a position today to ask the Board to take some action on this, but because we don't have the Geotech report to be able to develop the scope we can't develop the contract and the resolution that Jan would need to prepare to authorize us to piggyback.

One option would be to continue this meeting a couple weeks. There are a couple other factors that we need to consider, one, is the completion of the signage project at the entrance. Now that we have finally gotten the permit from RCID's successor we are negotiating the final settlement of the agreement with Don Bell Signs and their subcontractor. Jim has a meeting with them onsite next week to get the work done. I think the permit requires the work to be done by the end of August, which is good if that happens because the paving won't necessarily be held up by that. Then there is Signia's ongoing project and the timing of that and the construction traffic and how that would dovetail with the paving. We need some feedback from Signia.

Mr. Sawyers stated the waterside ballroom will not be substantially completed until mid-January. You can see the exterior work is almost complete at this point. I think it is a more reasonable number. The other thing that is happening is the golf course which is being redone and I think most of the sod will be complete by the end of this month if not next, which means

that the larger trucks are not going to be as frequent. However, at the end of the project we have to go back and redo the 16th hole and we can't do that until the trucks and staging is out. There is going to be some construction. I don't think it is going to be nearly what it has been and certainly not bringing in heavy steel, etc.

Mr. Flint asked when would that curb cut be able to be eliminated?

Mr. Sawyers stated I can find out. I would guess they will want to keep that until the very end.

Mr. Flint stated maybe we don't need to continue the meeting. Originally, we talked about trying to get the paving done in August. At this point it is not going to happen in August anyway. The question is how soon after that do you want to be able to do it. We will keep moving forward, we will have the Geotech report next week, get the scope together, the resolution approving the piggyback and we can have that on the August agenda. As to timing, I don't know how far out Middlesex is on scheduling so we can have the discussion at that point.

SEVENTH ORDER OF BUSINESS **Consideration of Resolution 2023-08 Approving Middlesex Contract and Bid Documents**

This item was tabled.

EIGHTH ORDER OF BUSINESS **Staff Reports**

A. Attorney

Ms. Carpenter stated the memo I distributed goes over the laws that take effect July 1st. The ethics training that city and county officials had to undertake in their roll has now been extended to Districts. All Board members need to take four hours of ethics training. There are some free sources that is in the memo. It will be once a year, but we don't have the specifics yet. The other legislative updates are more for information.

B. Engineer

Mr. Nugent stated we have the State and the Corps permit in hand we finally got the Reedy Creek right of way permit to restart the sign work. I have a meeting set up with Don Bell Signs and his landscape contractor onsite next Tuesday to review current plans, scope and the schedule since they acknowledge time is of the essence since August 31st is our deadline. The

work in the easement needs to advance first. Trees need to be relocated, other vegetation replaced and irrigation needs to be moved back.

Monday, we have a discussion with George and Jan on outstanding change order and cost to try to get closure on what portion of the cost for the permitting they need to bear and what portion the District needs to bear. I have put together a spreadsheet through June 1st that summed what I think their percentage was and the District's percentage. I did a breakout for the erosion control measures that Reedy Creek required us to reimplement while we were waiting to finish landscaping. Those will be points of discussion with the contractor on Monday. To give you an idea out of the amount spent for the permitting effort close to $80,000 about $30,500 of it would be the sign contractor's responsibility because they cleared outside the limits of the easement. They previously submitted a change order for the additional erosion control measures that Reedy Creek wanted and when you break out the area that was over cleared outside the limits, the outstanding amount that they would be responsible for is about $4,400 and the District would be responsible for about $32,000. Between what they hope their responsibility and our responsibility is not a wash, but it is close. After that is done I can re-tee up the discussion with Reedy Creek about our way finding signs. We want to get that moving again.

C. District Manager's Report

i. Consideration of Check Register

On MOTION by Mr. Greene seconded by Mr. Sawyers with all in favor the check register was approved.

ii. Balance Sheet and Income Statement

A copy of the balance sheet and income statement were included in the agenda package.

D. Field Manager's Report

Mr. Smith gave an overview of the field manager's report and outlined some issues with the landscape contractor.

Mr. Flint stated if we can get someone to match the current contract, we will be under the formal bid threshold. I also don't want to sacrifice quality by having someone come in at the

same rate as Yellowstone where they weren't able to perform. We would like to start with an informal bid process and see if we can realistically stay under the threshold and if we can't, we will go through the formal bid process.

> On MOTION by Mr. Scinta seconded by Mr. Sawyers with all in favor staff was authorized to solicit proposals for landscape maintenance services and the chair and District Manager were authorized to exercise the 30-day termination provision in the existing contract if need be.

NINTH ORDER OF BUSINESS **Supervisor's Requests**

There being no comments, the next item followed.

TENTH ORDER OF BUSINESS **Other Business**

There being no comments, the next item followed.

ELEVENTH ORDER OF BUSINESS **Adjournment**

> On MOTION by Mr. Greene seconded by Mr. Scinta with all in favor the meeting adjourned at 2:06 p.m.

_____ _____

Secretary/Assistant Secretary Chairman/Vice Chairman

SECTION 4

Report
Geotechnical Engineering Services
Pavement Evaluation & Engineering
Chelonia Parkway
Orange County, Florida
PSI Project No. 07573081

Project Number: 07573081
July 14, 2023

Professional Service Industries, Inc.
1748 33rd Street, Orlando, FL 32839
Phone: (407) 304-5560
Fax: (407) 304-5561

Mr. Randall Greene, Chairman
Bonnet Creek Resort Community Development District
219 East Livingston Street
Orlando, Florida 32801

RE: Report
Geotechnical Engineering Services
Pavement Evaluation & Engineering
Chelonia Parkway
Orange County, Florida

Dear Mr. Greene:

In general accordance with PSI Proposal No. 0757-400742 dated May 25, 2023, and your authorization, **Professional Service Industries, Inc. (PSI), an Intertek company,** has completed a pavement evaluation at the site of the referenced project. The evaluation was conducted to provide an assessment of the condition of the existing roadway pavement and associated soil and groundwater conditions to develop engineering recommendations for repair/rehabilitation of the existing roadway.

PROJECT INFORMATION

The subject roadway, Chelonia Parkway, extends from East Buena Vista Boulevard south and east to its terminus at the JW Marriott Resort located in the western quadrant of the Interstate 4/EPCOT Center Drive Interchange. Chelonia Parkway is a 4-lane, median divided, asphalt paved urban roadway with curb and gutter. Generally, the roadway is elevated in fill embankment and superelevated in areas of curved alignment. The plans provided to PSI indicate the typical pavement section comprises 2 inches of asphalt over 8 inches of soil cement and 12 inches of subgrade. The raised road median is landscaped and irrigated. We understand some areas of the roadway have underdrain installed to control groundwater. Chelonia Parkway was originally constructed in the early 2000's to support construction of the Hilton and Waldorf Astoria Resorts, as well as provide access to the future site of the more recently constructed JW Marriott Resort located at the eastern terminus of Chelonia Parkway.

Based on the information provided by Mr. Jim Nugent, P.E. of DWMA and observations during PSI's site visit, portions of Chelonia Parkway have experienced varying levels of distress and have undergone repairs with apparent mill and resurfacing and localized pavement repairs over the years to maintain roadway serviceability.

The noted information/assumptions have been used for the purpose of preparing this report. If any of the stated information/assumptions are incorrect or have been changed, PSI should be notified so appropriate changes to our recommendations can be incorporated in this report.

REVIEW OF PUBLISHED DATA

USGS Topographic Map

The topographic survey map published by the USGS entitled "Intercession City, Florida" was reviewed for ground surface features in the area of the proposed development. Based on this review, the natural ground surface elevation is on the order of +90 to +95 feet National Geodetic Vertical Datum (NGVD) of 1929. An excerpt of the noted USGS map is included in **Figure 1** in **Appendix A**. The record drawing plans provided to PSI indicate the roadway profile grade to range between approximate elevations +89.5 to +97 feet NAVD.

SCS Soil Survey

The "Soil Survey of Orange County, Florida," published by the USDA SCS, was reviewed for general near-surface soil information within the project vicinity. This information indicates that there are four soil groups and a water body (C-1 Canal/Bonnet Creek) within the vicinity of the project alignment. The general information provided by the Soil Survey for the mapped soil units is summarized in the following table.

Soil Series	Depth (inches)	AASTHO Classification	USDA Seasonal High Groundwater Table
			Depth (feet)
3—Basinger fine sand, frequently ponded, 0 to 1 percent slopes	0 to 80	A-3, A-2-4	+2.0 to 1.0
37—St. Johns fine sand	0 to 80	A-3, A-2-4	0 to 1.0
42—Sanibel muck	0 to 80	A-3, A-8	+1.0 to 1.0
44—Smyrna-Smyrna, wet, fine sand, 0 to 2 percent slopes	0 to 80	A-3, A-2-4	0 to 1.0
99— Water	—	—	—

Refer to **Figure 2** in **Appendix A** for the Soil Survey map for the project site.

PAVEMENT CORING & BORING RESULTS

General

As requested, PSI executed a program of subsurface sampling and field testing. PSI performed a field exploration program comprising thirty-four (34) full-depth pavement cores (asphalt and base), along with shallow manual auger borings to a depth of 2 to 6 feet below the existing pavement base at select locations in the east and westbound lanes of the roadway. The approximate locations of the pavement cores/borings are presented on **Sheet 1** in **Appendix A**. A list of asphalt and base thicknesses, as well as the depth of auger borings and encountered groundwater depth, are summarized in the following table.

Table 1: Pavement Core and Base Data

Core No.	Core Name	Asphalt Thickness (in.)	Base Thickness (in.)	Type of Base Material	Manual Auger Boring Depth (ft.)	Measured Groundwater Depth[1] (ft.)
1	CP-1	2.0	9.0	Soil cement	5.0	GNE
2	CP-2	1.5	9.0	Soil cement	0.0	GNE
3	CP-3	2.0	8.0	Soil cement	6.0	GNE
4	CP-4	1.5	9.0	Soil cement	0.0	GNE
5	CP-5	2.0	9.0	Soil cement	4.0	GNE
6	CP-6	2.25	8.0	Soil cement	6.0	GNE
7	CP-7	1.75	8.0	Soil cement	0.0	GNE
8	CP-8	2.25	11	Soil cement	3.0	GNE
9	CP-9	2.0	8.0	Soil cement	0.0	GNE
10	CP-10	3.0	8.5	Soil cement	5.5	GNE
11	CP-11	2.0	7.5	Soil cement	0.0	GNE
12	CP-12	2.25	7.5	Soil cement	3.0	GNE
13	CP-13	2.0	9.0	Soil cement	0.0	GNE
14	CP-14	2.5	10.5	Soil cement	0.0	GNE
15	CP-15	2.5	9.5	Durock	5.0	GNE
16	CP-16	2.75	8.0	Durock	0.0	GNE
17	CP-17	2.25	8.0	Durock	0.0	GNE
18	CP-18	2.5	8.0	Durock	3.0	GNE
19	CP-19	2.5	8.0	Durock	0.0	GNE
20	CP-20	2.25	8.0	Durock	4.0	GNE
21	CP-21	2.5	9.0	Durock	0.0	GNE
22	CP-22	2.0	8.0	Durock	0.0	GNE
23	CP-23	2.25	7.5	Durock	3.0	GNE
24	CP-24	2.0	8.0	Durock	0.0	GNE
25	CP-25	2.25	8.0	Durock	0.0	GNE
26	CP-26	2.5	8.5	Durock	4.0	GNE
27	CP-27	3.0	8.0	Soil cement	0.0	GNE
28	CP-28	2.25	8.75	Soil cement	4.0	GNE
29	CP-28-1	2.5	7.0	Concrete	4.0	GNE
30	CP-29	2.25	7.75	Soil cement	4.0	GNE
31	CP-30	2.0	7.75	Soil cement	0.0	GNE
32	CP-31	2.0	7.75	Soil cement	0.0	GNE
33	CP-32	2.75	8.25	Soil cement	4.0	GNE
34	CP-33	2.0	10.0	Sandy limerock	0.0	GNE

[1] Groundwater not evident within the boring depth.

Subgrade Soil Conditions

The soil types encountered at the specific boring locations are presented in the form of soil profiles on **Sheets 2 through 4** in **Appendix A**. Included with the boring profiles is a legend describing the encountered soils in AASHTO format and PSI's laboratory testing results.

In general, the borings revealed a series of fine sands grading relatively clean to slightly silty and silty in composition (i.e., A-3 and A-2-4 materials) from the exposed subgrade to boring termination depths. Some of the sands contained trace amounts of partially cemented sands, rocks/roots and clayey nodules.

The soil stratification presented is based on visual observation of the recovered soil samples, laboratory testing and interpretation of field logs by a geotechnical engineer. It should be noted that variations in the subsurface conditions are expected and may be encountered between and away from PSI's borings.

Groundwater

PSI performed hand auger borings through the subgrade soils in selected borings as an attempt to measure the groundwater table. At the time of our fieldwork (June 12 and 13, 2023), groundwater was not encountered in any of the borings.

PAVEMENT EVALUATION

In general, the existing pavements of Chelonia Parkway are in Poor condition with moderate to severe pavement distresses. Based on our pavement coring, the pavement section includes various thicknesses of Type S asphaltic concrete (1.5 inches to 3.0 inches) with various thicknesses of base material (7.0 inches to 11 inches). Most of the encountered base materials are composed of either soil cement or Durock. We encountered concrete base material at the location of boring CP-28-1 with recent asphalt patching. In addition, we encountered sandy limerock base in boring CP-33 located at a left turn lane.

Based on PSI's pavement survey and recovered pavement cores, most of the project limits where soil cement and Durock are present, exhibit reflective cracks in the form of longitudinal, transverse and block cracking to the extent of isolated areas with alligator cracking and base failure. The reflective cracks are full depth, propagating from the base layer to the asphalt layer.

PAVEMENT RECOMMENDATIONS

We were not provided with any traffic information for the project; however, based on the information provided to us, our previous experience with similar construction, the noted project information, data obtained during this study, and our visual roadway survey, the following pavement engineering recommendations are provided for the reconstruction/rehabilitation of the alignment based on the order of performance (Option 1 highest performance and Option 3 the lowest performance). It should be noted that a thicker pavement section is recommended if either Option 1 or Option 2 are chosen due to the increased traffic loading resulting from the additional development that has taken place since the original roadway construction. If Option 3 is selected, reflective cracking of the asphalt should be anticipated to continue in the future from the existing soil cement/Durock base materials.

Option 1- Total Reconstruction:

Full-depth removal of the existing asphalt, base, and subgrade to a depth on the order of 24 inches below the existing grade to maintain the existing pavement grade elevation. Any unsuitable materials (i.e., peat/organic soils/clayey soils (A-2-6, and A-6 materials)) below the exposed excavated grade shall be removed to their entirety and hauled off the site. The resulting over-excavation of unsuitable soils shall be backfilled with compacted clean sands (A-3 soils). Compact the exposed subgrade soils to at least 95 percent of the material's modified Proctor (ASTM D-1557) maximum dry density. Construct the new flexible pavement following the below recommendations:

- 3.0 inches asphaltic concrete (2 inches of SP-12.5 followed by 1.0-inch FC-9.5)
- 9.0 inches limerock (LBR=100) or crushed concrete (LBR = 150) base course, compacted to at least 98 percent of the material's modified Proctor (ASTM D-1557) maximum dry density.
- 12.0 inches stabilized subgrade, Type B Stabilization (LBR = 40), compacted to at least 98 percent of the material's modified Proctor (ASTM D-1557) maximum dry density.

Option 2- Full Depth Reclamation (FDR)

Construct a minimum 9.0 inches of reclaimed base materials by pulverizing, mixing and reusing the existing asphalt, base and subgrade materials and adding additives (Portland cement and emulsion asphalt) at the designed ratios and placing/compacting the reclaimed materials. This process will provide an improved pavement base layer for support of the new surface asphaltic concrete. The FDR reclaimed base should be constructed in general accordance with FDOT Standard 334 following performance of a laboratory FDR mix design.

It should be noted that any unsuitable materials (i.e., peat/organic soils/clayey soils (A-2-6 and A-6 materials)) encountered within 2 feet below the bottom of the proposed FDR base (approximately 3 feet below the existing asphalt grade elevation) shall be removed and hauled off the site and backfilled with compacted A-3 type soil (granular material with less than 10 percent fines passing the #200 sieve)).

Following the construction of the reclaimed base layer, a minimum of 3.0 inches of asphalt concrete (2 inches of SP-12.5 followed by 1.0-inch FC-9.5) should be placed as the surface course.

Option 3- Mill and Resurfacing

Mill off the full depth of the existing asphalt. **Extra caution shall be taken to not disturb the existing base. The existing base materials are brittle, and disturbance or attempting compaction of the disturbed base will result in base disintegration.** Apply a prime coat according to the appropriate FDOT standards. Place a minimum of 2.0 inches of asphaltic concrete (2 lifts of SP-9.5, each one inch thick, with a minimum PG 67-22).

It should be noted resurfacing the existing base with full-depth shrinkage cracks, will result in the propagation of reflective cracks from the base to the new asphalt surface in an estimated 2 to 3 years post-paving.

PSI recommends all roadway construction be performed under the supervision of PSI's geotechnical engineer or his representative. All pavement materials and construction procedures should be in accordance with the latest Florida Department of Transportation (FDOT) standards.

REPORT LIMITATIONS

Our professional services have been performed, our findings obtained, and our recommendations prepared in accordance with generally accepted pavement engineering principles and practices. This company is not responsible for the conclusions, opinions or recommendations made by others based on these data.

The analysis and recommendations submitted in this report are based on the data obtained from the limited pavement cores/hand auger borings and PSI's laboratory testing. If any material variations become evident during the course of this project, a re-evaluation of the recommendations contained in this report will be necessary after we have had an opportunity to observe the characteristics of the conditions encountered.

The scope of our services does not include any environmental assessment or investigation for the presence or absence of hazardous or toxic materials in the soil, groundwater, or surface water within or beyond the site studied. PSI did not perform any drainage study or traffic study for the project site.

CLOSURE

We appreciate the opportunity to be of service on this project and we trust that the foregoing and accompanying attachments are of assistance to you at this time. In the event that you have any questions, or if you require additional information, please contact us.

Respectfully submitted,

PROFESSIONAL SERVICE INDUSTRIES, INC.
Certificate of Authorization No. 3684

Paola Castillo, MS.c, M.eng
Staff Engineer

Behnam Golestani, Ph.D., P.E.
Principal Consultant/Senior Project Engineer
Florida License No. 84787

Robert A. Trompke, P.E.
Principal Consultant/Florida Geotechnical Practice Leader
FL License No. 55456

07573081 (Pavement Evaluation & Engineering Chelonia Parkway).docx

Attachments:

- Appendix A – Pavement Core/Boring Location Plan & Profiles
- Appendix B - Pavement Core Photographs

APPENDIX A

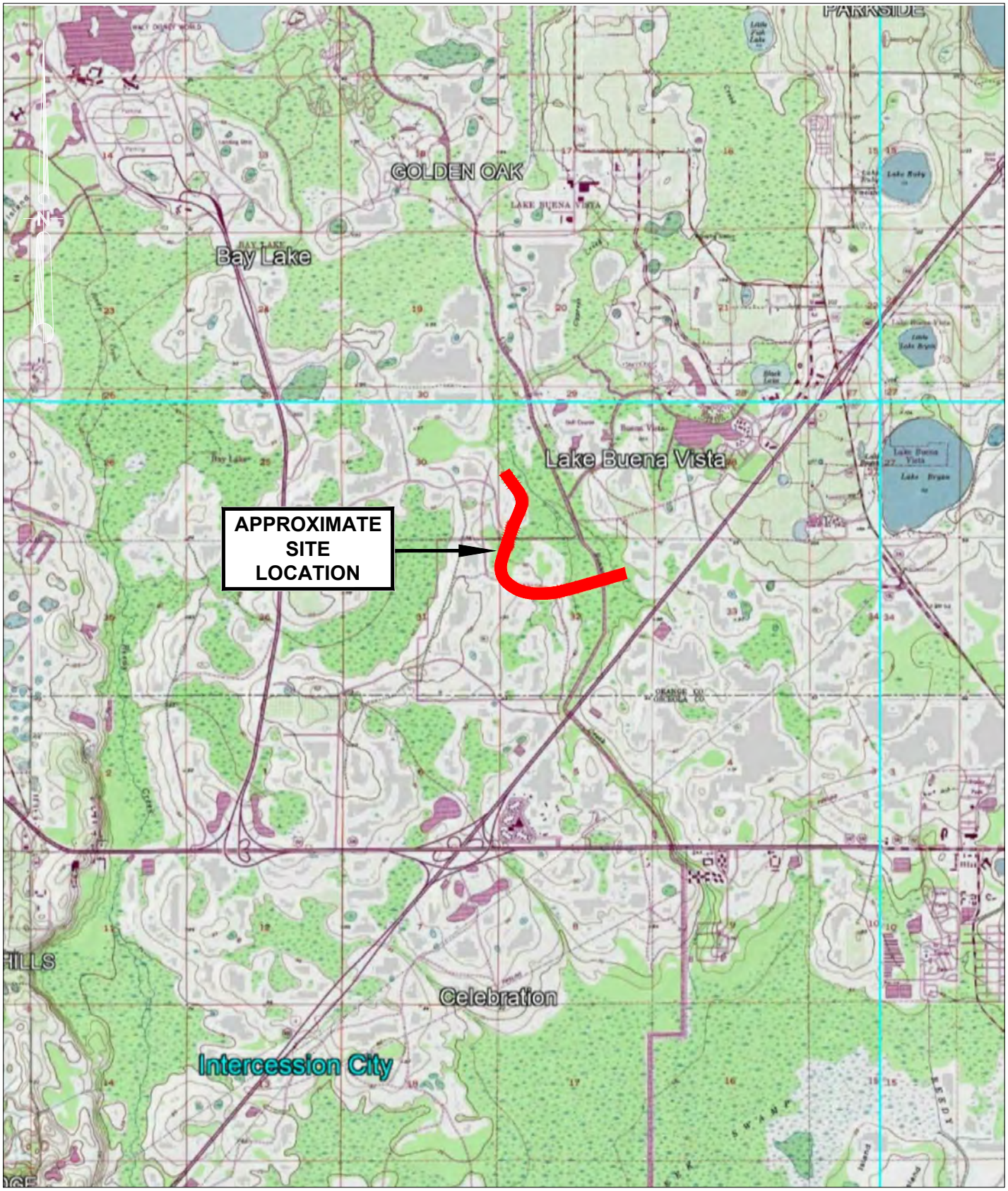

REFERENCE: U.S.G.S. QUADRANGLE MAP. THE REPRESENTED DATA IS FOR INFORMATION PURPOSES ONLY. IT IS NOT MEANT FOR DESIGN, LEGAL, OR ANY OTHER USES. INTERTEK-PSI ASSUMES NO RESPONSIBILITY FOR ANY DECISIONS MADE OR ANY ACTIONS TAKEN BY THE USER BASED UPON INFORMATION OBTAINED FROM THE ABOVE DATA.

PROJ. NO: 07573081	intertek psi	TOPOGRAPHIC MAP	FIGURE: 1
SCALE: 1"=5000'	1748 33rd Street Orlando, FL 32839 (407)304-5560 (407)304-5561 fax	**PAVEMENT EVALUATION & ENGINEERING** **CHELONIA PARKWAY**	DRAWN: DJW
DATE CREATED: 7-12-23		ORANGE COUNTY, FLORIDA	CHECKED: PC

REFERENCE: THE AERIAL PHOTOGRAPH WAS OBTAINED FROM GOOGLE EARTH. THE REPRESENTED DATA IS FOR INFORMATION PURPOSES ONLY. IT IS NOT MEANT FOR DESIGN, LEGAL, OR ANY OTHER USES. INTERTEK-PSI ASSUMES NO RESPONSIBILITY FOR ANY DECISIONS MADE OR ANY ACTIONS TAKEN BY THE USER BASED UPON INFORMATION OBTAINED FROM THE ABOVE DATA.

PROJ. NO: 07573081	intertek psi	SOILS MAP	FIGURE: 2
SCALE: 1"=1500'	1748 33rd Street Orlando, FL 32839 (407)304-5560 (407)304-5561 fax	**PAVEMENT EVALUATION & ENGINEERING** **CHELONIA PARKWAY**	DRAWN: DJW
DATE CREATED: 7-12-23		ORANGE COUNTY, FLORIDA	CHECKED: PC

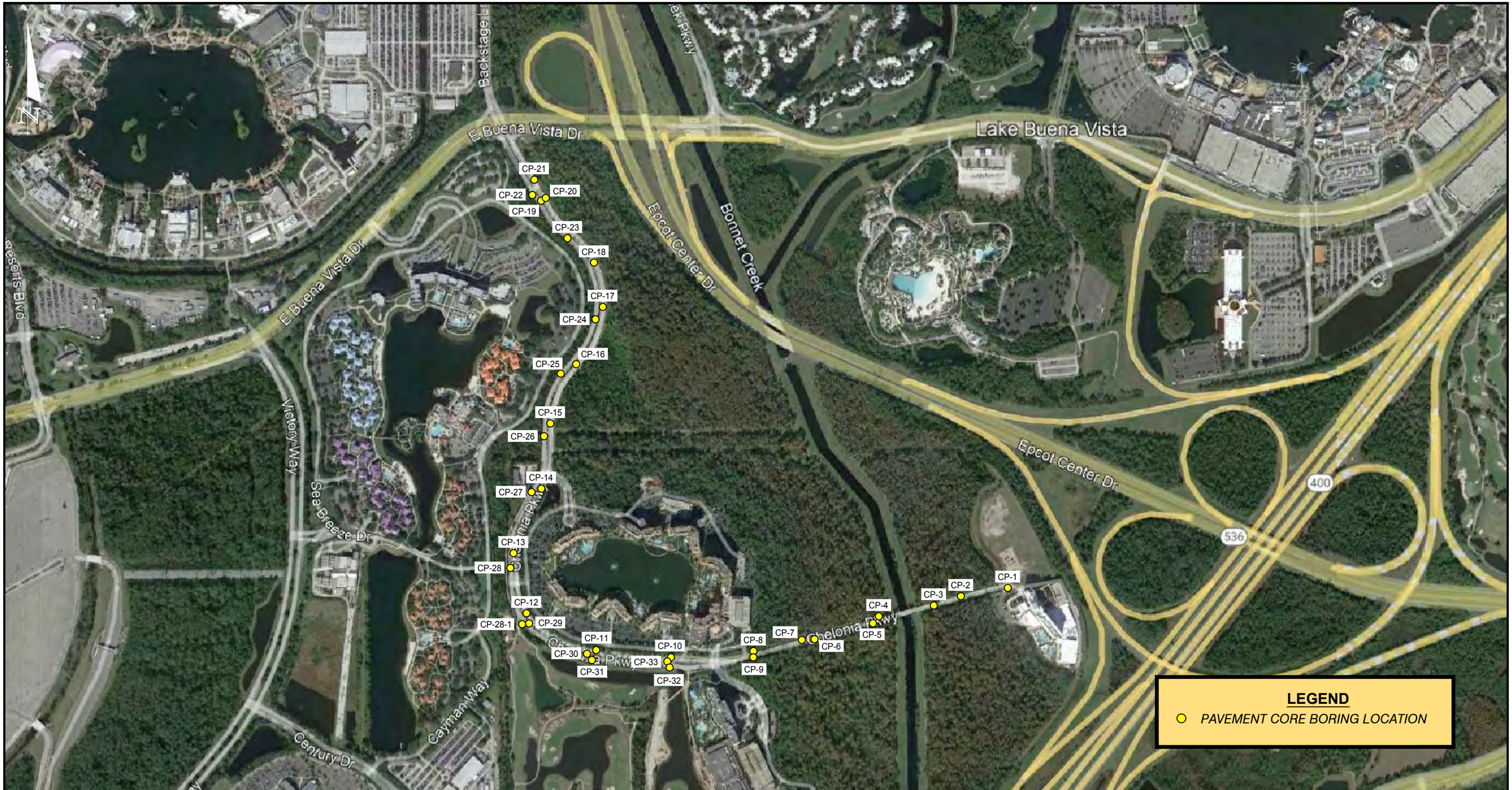

REFERENCE: THE AERIAL PHOTOGRAPH WAS OBTAINED FROM GOOGLE EARTH. THE PRESENTED DATA IS FOR INFORMATION PURPOSES ONLY. IT IS NOT MEANT FOR DESIGN, LEGAL, OR ANY OTHER USES. INTERTEK–PSI ASSUMES NO RESPONSIBILITY FOR ANY DECISIONS MADE OR ANY ACTIONS TAKEN BY THE USER BASED UPON INFORMATION OBTAINED FROM THE ABOVE DATA.

PROJECT NO. 07573081	intertek psi	1748 33rd Street Orlando, FL 32839 (407)304-5560 (407)304-5561 fax	SHEET: 1
SCALE: 1"=800'		GEOTECHNICAL ENGINEERING SERVICES **PAVEMENT EVALUATION & ENGINEERING** **CHELONIA PARKWAY** ORANGE COUNTY, FLORIDA	DRAWN: DJW
DATE CREATED: 7-12-23			CHECKED: PC

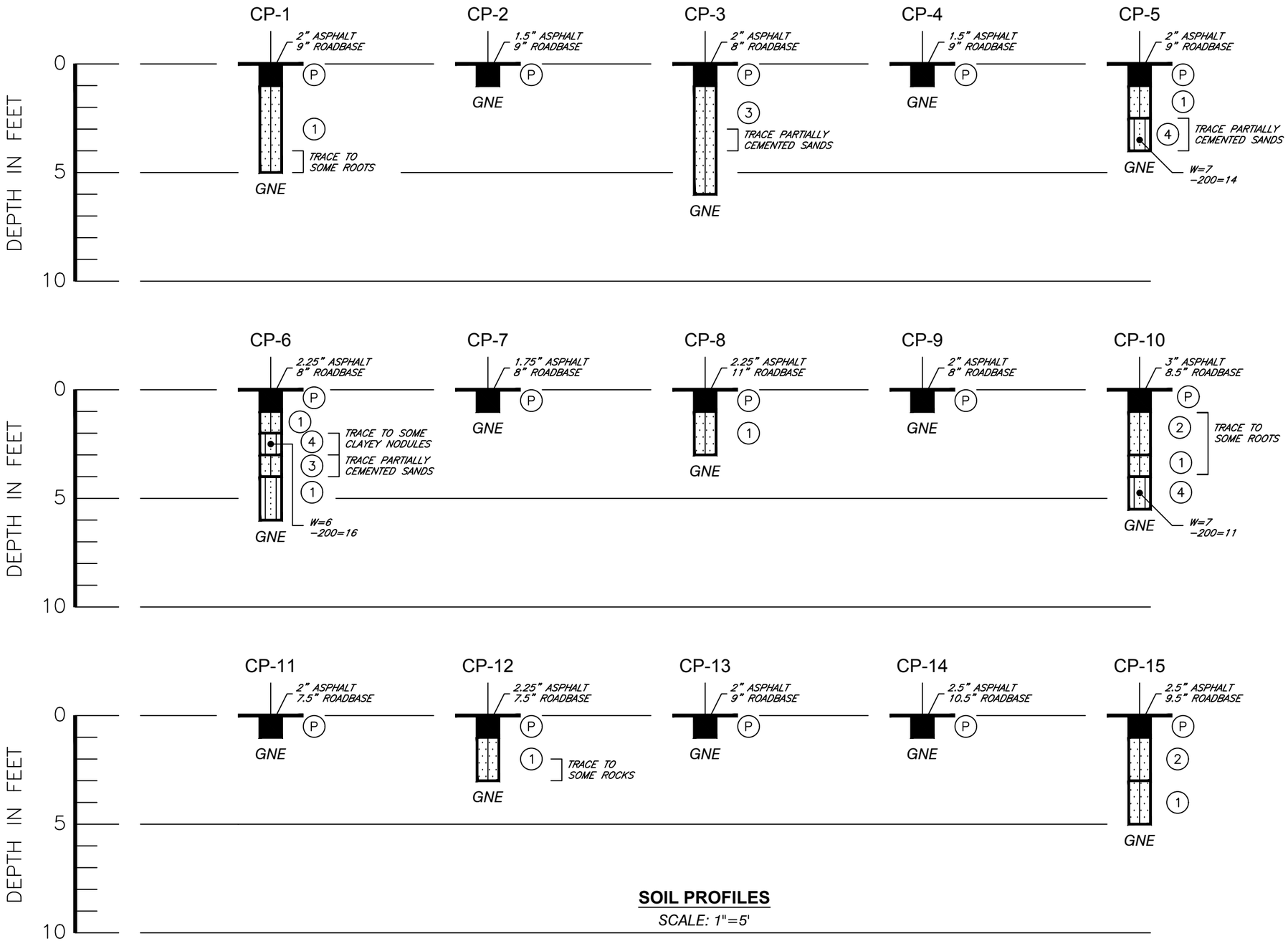

SOIL PROFILES

SCALE: 1"=5'

LEGEND

(P)	PAVEMENT/ASPHALT
(1)	GRAY-BROWN FINE SAND TO SLIGHTLY SILTY FINE SAND, (A-3)
(2)	DARK RED-BROWN FINE SAND TO SLIGHTLY SILTY FINE SAND, (A-3)
(3)	LIGHT BROWN TO MEDIUM BROWN FINE SAND TO SLIGHTLY SILTY FINE SAND, (A-3)
(4)	GRAY-BROWN SILTY FINE SAND, (A-2-4)
(SP)	UNIFIED SOIL CLASSIFICATION GROUP SYMBOL
GNE	GROUNDWATER NOT EVIDENT IN UPPER 5 FEET OF BORING
W	NATURAL MOISTURE CONTENT IN PERCENT
-200	FINES PASSING #200 SIEVE IN PERCENT

PROJECT NO. 07573081	intertek psi	1748 33rd Street Orlando, FL 32839 (407)304-5560 (407)304-5561 fax	GEOTECHNICAL ENGINEERING SERVICES **PAVEMENT EVALUATION & ENGINEERING** **CHELONIA PARKWAY** ORANGE COUNTY, FLORIDA
SCALE: NOTED			
DATE CREATED: 7-12-23			

SHEET: 2
DRAWN: DJW
CHECKED: PC

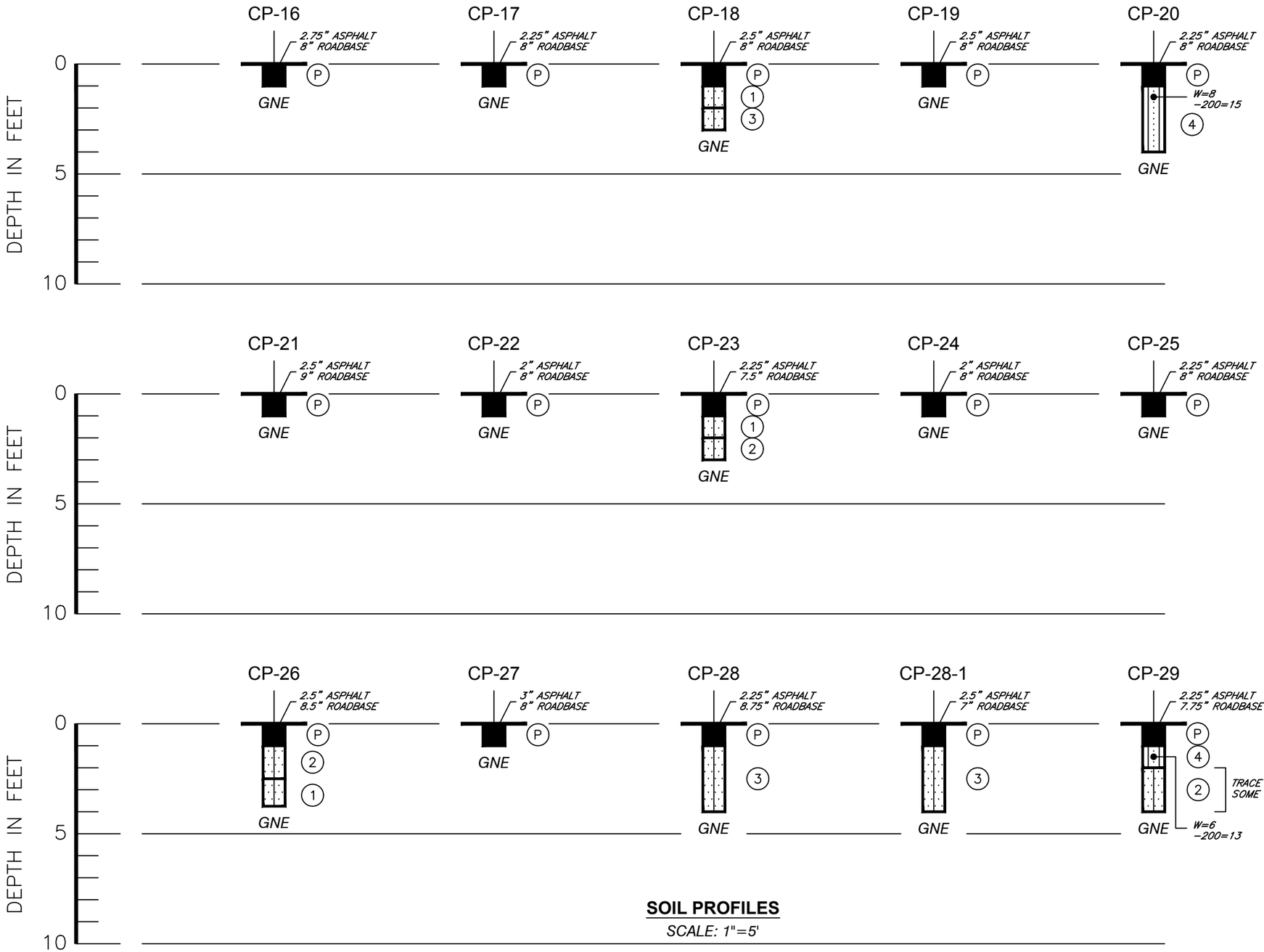

SOIL PROFILES

SCALE: 1"=5'

LEGEND

(P)	*PAVEMENT/ASPHALT*
(1)	*GRAY-BROWN FINE SAND TO SLIGHTLY SILTY FINE SAND, (A-3)*
(2)	*DARK RED-BROWN FINE SAND TO SLIGHTLY SILTY FINE SAND, (A-3)*
(3)	*LIGHT BROWN TO MEDIUM BROWN FINE SAND TO SLIGHTLY SILTY FINE SAND, (A-3)*
(4)	*GRAY-BROWN SILTY FINE SAND, (A-2-4)*
(SP)	*UNIFIED SOIL CLASSIFICATION GROUP SYMBOL*
GNE	*GROUNDWATER NOT EVIDENT IN UPPER 5 FEET OF BORING*
W	*NATURAL MOISTURE CONTENT IN PERCENT*
-200	*FINES PASSING #200 SIEVE IN PERCENT*

PROJECT NO. 07573081	intertek psi	GEOTECHNICAL ENGINEERING SERVICES	SHEET: 3
SCALE: NOTED	1748 33rd Street Orlando, FL 32839 (407)304-5560 (407)304-5561 fax	**PAVEMENT EVALUATION & ENGINEERING** **CHELONIA PARKWAY**	DRAWN: DJW
DATE CREATED: 7-12-23		ORANGE COUNTY, FLORIDA	CHECKED: PC

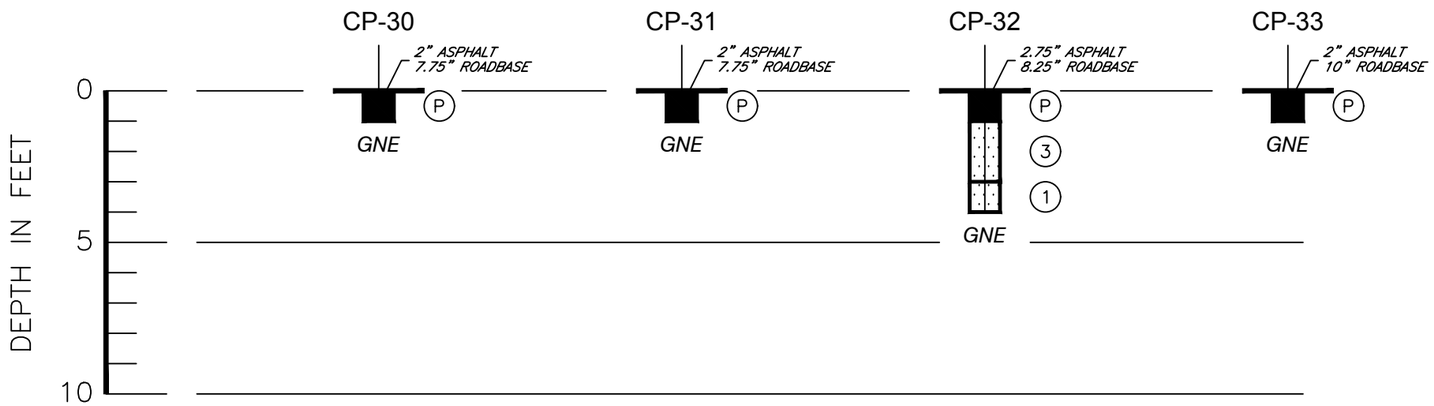

SOIL PROFILES

SCALE: 1"=5'

LEGEND

(P)	*PAVEMENT/ASPHALT*
(1)	*GRAY-BROWN FINE SAND TO SLIGHTLY SILTY FINE SAND, (A-3)*
(2)	*DARK RED-BROWN FINE SAND TO SLIGHTLY SILTY FINE SAND, (A-3)*
(3)	*LIGHT BROWN TO MEDIUM BROWN FINE SAND TO SLIGHTLY SILTY FINE SAND, (A-3)*
(4)	*GRAY-BROWN SILTY FINE SAND, (A-2-4)*
(SP)	*UNIFIED SOIL CLASSIFICATION GROUP SYMBOL*
GNE	*GROUNDWATER NOT EVIDENT IN UPPER 5 FEET OF BORING*
W	*NATURAL MOISTURE CONTENT IN PERCENT*
-200	*FINES PASSING #200 SIEVE IN PERCENT*

PROJECT NO. 07573081	intertek psi	1748 33rd Street Orlando, FL 32839 (407)304-5560 (407)304-5561 fax	GEOTECHNICAL ENGINEERING SERVICES **PAVEMENT EVALUATION & ENGINEERING** **CHELONIA PARKWAY** ORANGE COUNTY, FLORIDA
SCALE: NOTED			
DATE CREATED: 7-12-23			

SHEET: 4
DRAWN: DJW
CHECKED: PC

APPENDIX B

PAVEMENT CORE PHOTOGRAPHS

- **Asphalt:** 2 inches
- **Pavement Base:** 9 inches of soil cement

SHEET NO.:	
DRAWN BY:	P.C.
CHECKED BY:	B.G.

GEOTECHNICAL ENGINEERING SERVICES
PAVEMENT EVALUATION & ENGINEERING
CHELONIA PARKWAY
ORANGE COUNTY, FLORIDA
PROJECT NO. 07573081
DATE: 7/12/2023

intertek psi

PAVEMENT CORE PHOTOGRAPHS

- **Asphalt:** 1.5 inches
- **Pavement Base:** 9 inches of soil cement

SHEET NO.:	
DRAWN BY:	P.C.
CHECKED BY:	B.G.

GEOTECHNICAL ENGINEERING SERVICES
PAVEMENT EVALUATION & ENGINEERING
CHELONIA PARKWAY
ORANGE COUNTY, FLORIDA
PROJECT NO. 07573081
DATE: 7/12/2023

intertek psi

PAVEMENT CORE PHOTOGRAPHS

- **Asphalt:** 2 inches
- **Pavement Base:** 8 inches of soil cement

SHEET NO.:	
DRAWN BY:	P.C.
CHECKED BY:	B.G.

GEOTECHNICAL ENGINEERING SERVICES
PAVEMENT EVALUATION & ENGINEERING
CHELONIA PARKWAY
ORANGE COUNTY, FLORIDA
PROJECT NO. 07573081
DATE: 7/12/2023

intertek psi

PAVEMENT CORE PHOTOGRAPHS

- **Asphalt:** 1.5 inches
- **Pavement Base:** 9 inches of soil cement

SHEET NO.:	
DRAWN BY:	P.C.
CHECKED BY:	B.G.

GEOTECHNICAL ENGINEERING SERVICES
PAVEMENT EVALUATION & ENGINEERING
CHELONIA PARKWAY
ORANGE COUNTY, FLORIDA
PROJECT NO. 07573081
DATE: 7/12/2023

intertek psi

PAVEMENT CORE PHOTOGRAPHS

- **Asphalt:** 2 inches
- **Pavement Base:** 9 inches of soil cement

SHEET NO.:	
DRAWN BY:	P.C.
CHECKED BY:	B.G.

GEOTECHNICAL ENGINEERING SERVICES
PAVEMENT EVALUATION & ENGINEERING
CHELONIA PARKWAY
ORANGE COUNTY, FLORIDA
PROJECT NO. 07573081
DATE: 7/12/2023

intertek psi

PAVEMENT CORE PHOTOGRAPHS

- **Asphalt:** 2.25 inches
- **Pavement Base:** 8 inches of soil cement

SHEET NO.:	
DRAWN BY:	P.C.
CHECKED BY:	B.G.

GEOTECHNICAL ENGINEERING SERVICES
PAVEMENT EVALUATION & ENGINEERING
CHELONIA PARKWAY
ORANGE COUNTY, FLORIDA
PROJECT NO. 07573081
DATE: 7/12/2023

intertek psi

PAVEMENT CORE PHOTOGRAPHS

- **Asphalt:** 1.75 inches
- **Pavement Base:** 8 inches of soil cement

SHEET NO.:	
DRAWN BY:	P.C.
CHECKED BY:	B.G.

GEOTECHNICAL ENGINEERING SERVICES
PAVEMENT EVALUATION & ENGINEERING
CHELONIA PARKWAY
ORANGE COUNTY, FLORIDA
PROJECT NO. 07573081
DATE: 7/12/2023

intertek psi

PAVEMENT CORE PHOTOGRAPHS

- **Asphalt:** 2.25 inches
- **Pavement Base:** 11 inches of soil cement

SHEET NO.:	
DRAWN BY:	P.C.
CHECKED BY:	B.G.

GEOTECHNICAL ENGINEERING SERVICES
PAVEMENT EVALUATION & ENGINEERING
CHELONIA PARKWAY
ORANGE COUNTY, FLORIDA
PROJECT NO. 07573081
DATE: 7/12/2023

intertek psi

PAVEMENT CORE PHOTOGRAPHS

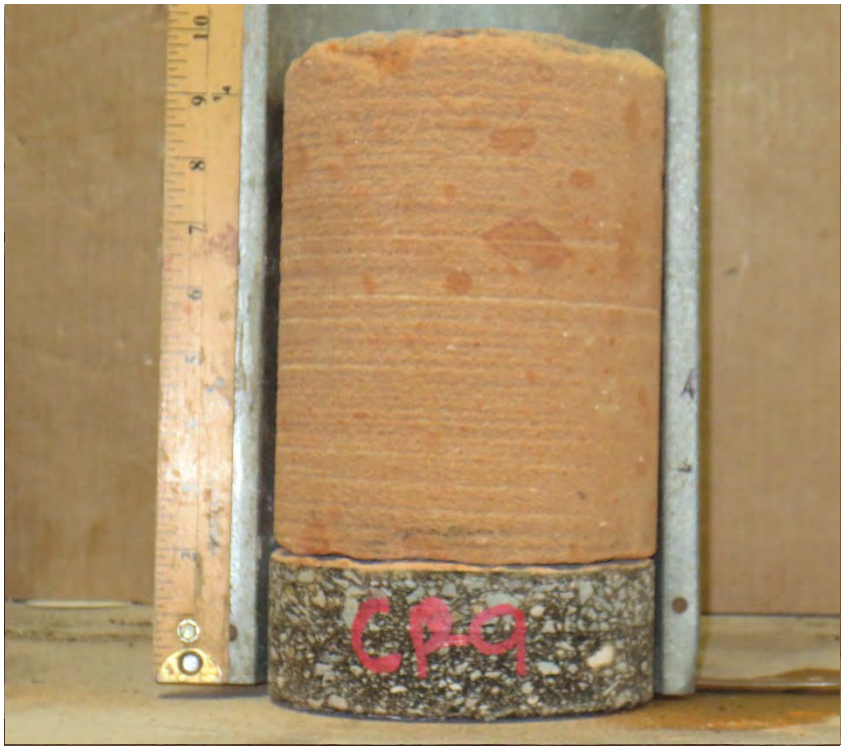

- **Asphalt:** 2 inches
- **Pavement Base:** 8 inches of soil cement

SHEET NO.:	
DRAWN BY:	P.C.
CHECKED BY:	B.G.

GEOTECHNICAL ENGINEERING SERVICES
PAVEMENT EVALUATION & ENGINEERING
CHELONIA PARKWAY
ORANGE COUNTY, FLORIDA
PROJECT NO. 07573081
DATE: 7/12/2023

intertek psi

PAVEMENT CORE PHOTOGRAPHS

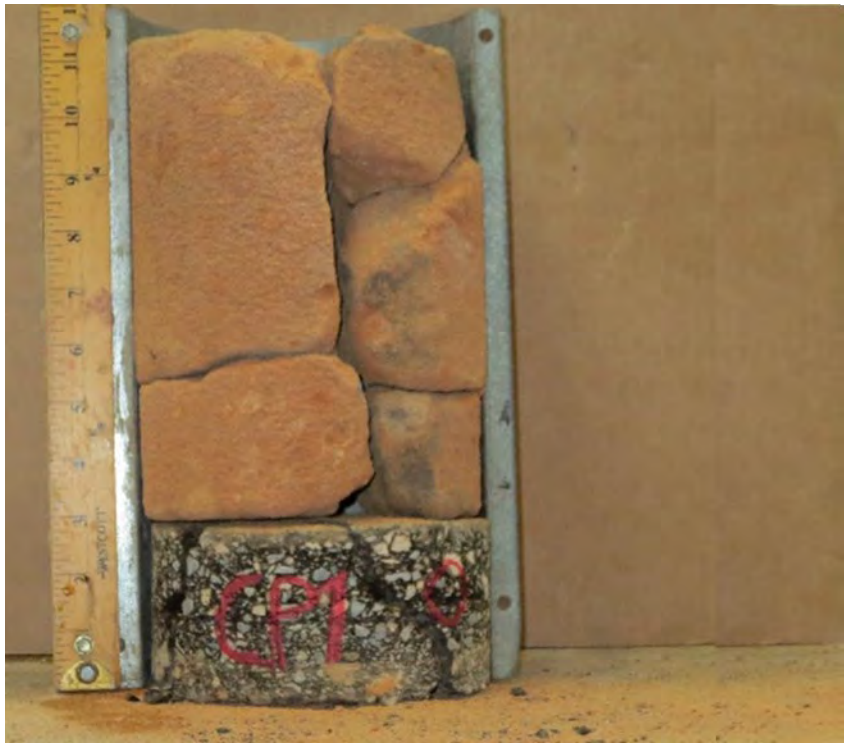

- **Asphalt:** 3 inches
- **Pavement Base:** 8.5 inches of soil cement

SHEET NO.:	
DRAWN BY:	P.C.
CHECKED BY:	B.G.

GEOTECHNICAL ENGINEERING SERVICES
PAVEMENT EVALUATION & ENGINEERING
CHELONIA PARKWAY
ORANGE COUNTY, FLORIDA
PROJECT NO. 07573081
DATE: 7/12/2023

intertek psi

PAVEMENT CORE PHOTOGRAPHS

- **Asphalt:** 2 inches
- **Pavement Base:** 7.5 inches of soil cement

SHEET NO.:	
DRAWN BY:	P.C.
CHECKED BY:	B.G.

GEOTECHNICAL ENGINEERING SERVICES
PAVEMENT EVALUATION & ENGINEERING
CHELONIA PARKWAY
ORANGE COUNTY, FLORIDA
PROJECT NO. 07573081
DATE: 7/12/2023

intertek psi

PAVEMENT CORE PHOTOGRAPHS

- **Asphalt:** 2.25 inches
- **Pavement Base:** 7.5 inches of soil cement

SHEET NO.:	
DRAWN BY:	P.C.
CHECKED BY:	B.G.

GEOTECHNICAL ENGINEERING SERVICES
PAVEMENT EVALUATION & ENGINEERING
CHELONIA PARKWAY
ORANGE COUNTY, FLORIDA
PROJECT NO. 07573081
DATE: 7/12/2023

intertek psi

PAVEMENT CORE PHOTOGRAPHS

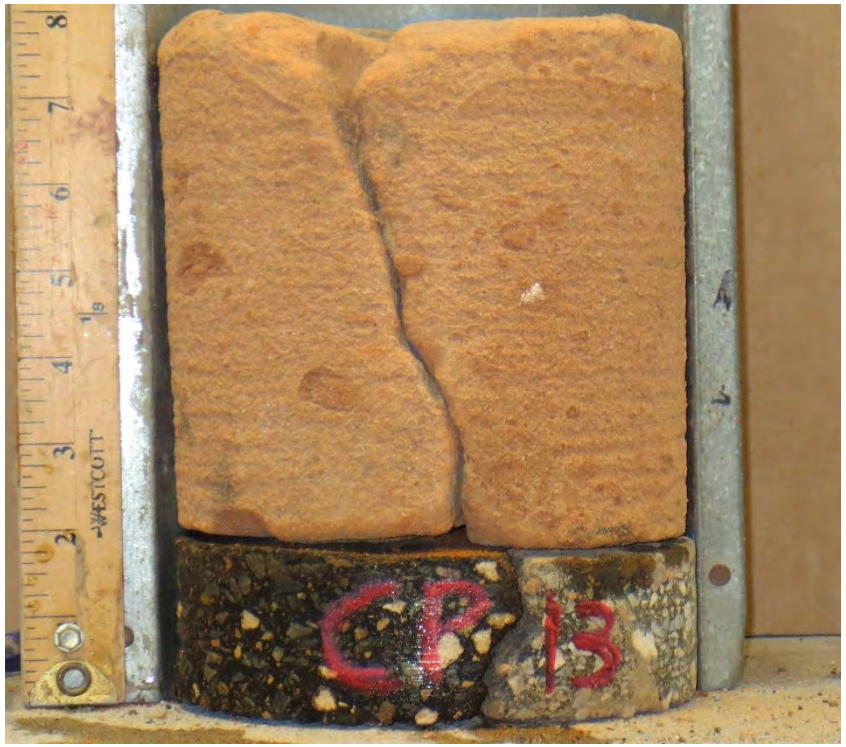

- **Asphalt:** 2 inches
- **Pavement Base:** 9 inches of soil cement

SHEET NO.:	
DRAWN BY:	P.C.
CHECKED BY:	B.G.

GEOTECHNICAL ENGINEERING SERVICES
PAVEMENT EVALUATION & ENGINEERING
CHELONIA PARKWAY
ORANGE COUNTY, FLORIDA
PROJECT NO. 07573081
DATE: 7/12/2023

intertek psi

PAVEMENT CORE PHOTOGRAPHS

- **Asphalt:** 2.5 inches
- **Pavement Base:** 10.5 inches of soil cement

SHEET NO.:	
DRAWN BY:	P.C.
CHECKED BY:	B.G.

GEOTECHNICAL ENGINEERING SERVICES
PAVEMENT EVALUATION & ENGINEERING
CHELONIA PARKWAY
ORANGE COUNTY, FLORIDA
PROJECT NO. 07573081
DATE: 7/12/2023

intertek psi

PAVEMENT CORE PHOTOGRAPHS

- **Asphalt:** 2.5 inches
- **Pavement Base:** 9.5 inches of Durock

SHEET NO.:	
DRAWN BY:	P.C.
CHECKED BY:	B.G.

GEOTECHNICAL ENGINEERING SERVICES
PAVEMENT EVALUATION & ENGINEERING
CHELONIA PARKWAY
ORANGE COUNTY, FLORIDA
PROJECT NO. 07573081
DATE: 7/12/2023

intertek psi

PAVEMENT CORE PHOTOGRAPHS

- **Asphalt:** 2.75 inches
- **Pavement Base:** 8 inches of Durock

SHEET NO.:	
DRAWN BY:	P.C.
CHECKED BY:	B.G.

GEOTECHNICAL ENGINEERING SERVICES
PAVEMENT EVALUATION & ENGINEERING
CHELONIA PARKWAY
ORANGE COUNTY, FLORIDA
PROJECT NO. 07573081
DATE: 7/12/2023

intertek psi

PAVEMENT CORE PHOTOGRAPHS

- **Asphalt:** 2.25 inches
- **Pavement Base:** 8 inches of Durock

SHEET NO.:	
DRAWN BY:	P.C.
CHECKED BY:	B.G.

GEOTECHNICAL ENGINEERING SERVICES
PAVEMENT EVALUATION & ENGINEERING
CHELONIA PARKWAY
ORANGE COUNTY, FLORIDA
PROJECT NO. 07573081
DATE: 7/12/2023

intertek psi

PAVEMENT CORE PHOTOGRAPHS

- **Asphalt:** 2.5 inches
- **Pavement Base:** 8 inches of Durock

SHEET NO.:	
DRAWN BY:	P.C.
CHECKED BY:	B.G.

GEOTECHNICAL ENGINEERING SERVICES
PAVEMENT EVALUATION & ENGINEERING
CHELONIA PARKWAY
ORANGE COUNTY, FLORIDA
PROJECT NO. 07573081
DATE: 7/12/2023

intertek psi

PAVEMENT CORE PHOTOGRAPHS

- **Asphalt:** 2.5 inches
- **Pavement Base:** 8 inches of Durock

SHEET NO.:	
DRAWN BY:	P.C.
CHECKED BY:	B.G.

GEOTECHNICAL ENGINEERING SERVICES
PAVEMENT EVALUATION & ENGINEERING
CHELONIA PARKWAY
ORANGE COUNTY, FLORIDA
PROJECT NO. 07573081
DATE: 7/12/2023

intertek psi

PAVEMENT CORE PHOTOGRAPHS

- **Asphalt:** 2.25 inches
- **Pavement Base:** 8 inches of Durock

SHEET NO.:	
DRAWN BY:	P.C.
CHECKED BY:	B.G.

GEOTECHNICAL ENGINEERING SERVICES
PAVEMENT EVALUATION & ENGINEERING
CHELONIA PARKWAY
ORANGE COUNTY, FLORIDA
PROJECT NO. 07573081
DATE: 7/12/2023

intertek psi

PAVEMENT CORE PHOTOGRAPHS

- **Asphalt:** 2.5 inches
- **Pavement Base:** 9 inches of Durock

SHEET NO.:	
DRAWN BY:	P.C.
CHECKED BY:	B.G.

GEOTECHNICAL ENGINEERING SERVICES
PAVEMENT EVALUATION & ENGINEERING
CHELONIA PARKWAY
ORANGE COUNTY, FLORIDA
PROJECT NO. 07573081
DATE: 7/12/2023

intertek psi

PAVEMENT CORE PHOTOGRAPHS

- **Asphalt:** 2 inches
- **Pavement Base:** 8 inches of Durock

SHEET NO.:	
DRAWN BY:	P.C.
CHECKED BY:	B.G.

GEOTECHNICAL ENGINEERING SERVICES
PAVEMENT EVALUATION & ENGINEERING
CHELONIA PARKWAY
ORANGE COUNTY, FLORIDA
PROJECT NO. 07573081
DATE: 7/12/2023

intertek psi

PAVEMENT CORE PHOTOGRAPHS

- **Asphalt:** 2.25 inches
- **Pavement Base:** 7.5 inches of Durock

SHEET NO.:	
DRAWN BY:	P.C.
CHECKED BY:	B.G.

GEOTECHNICAL ENGINEERING SERVICES
PAVEMENT EVALUATION & ENGINEERING
CHELONIA PARKWAY
ORANGE COUNTY, FLORIDA
PROJECT NO. 07573081
DATE: 7/12/2023

intertek psi

PAVEMENT CORE PHOTOGRAPHS

- **Asphalt:** 2 inches
- **Pavement Base:** 8 inches of Durock

SHEET NO.:	
DRAWN BY:	P.C.
CHECKED BY:	B.G.

GEOTECHNICAL ENGINEERING SERVICES
PAVEMENT EVALUATION & ENGINEERING
CHELONIA PARKWAY
ORANGE COUNTY, FLORIDA
PROJECT NO. 07573081
DATE: 7/12/2023

intertek psi

PAVEMENT CORE PHOTOGRAPHS

- **Asphalt:** 2.25 inches
- **Pavement Base:** 8 inches of Durock

SHEET NO.:	
DRAWN BY:	P.C.
CHECKED BY:	B.G.

GEOTECHNICAL ENGINEERING SERVICES
PAVEMENT EVALUATION & ENGINEERING
CHELONIA PARKWAY
ORANGE COUNTY, FLORIDA
PROJECT NO. 07573081
DATE: 7/12/2023

intertek psi

PAVEMENT CORE PHOTOGRAPHS

- **Asphalt:** 2.5 inches
- **Pavement Base:** 8.5 inches of Durock

SHEET NO.:	
DRAWN BY:	P.C.
CHECKED BY:	B.G.

GEOTECHNICAL ENGINEERING SERVICES
PAVEMENT EVALUATION & ENGINEERING
CHELONIA PARKWAY
ORANGE COUNTY, FLORIDA
PROJECT NO. 07573081
DATE: 7/12/2023

intertek psi

PAVEMENT CORE PHOTOGRAPHS

- **Asphalt:** 3 inches
- **Pavement Base:** 8 inches of soil cement

SHEET NO.:	
DRAWN BY:	P.C.
CHECKED BY:	B.G.

GEOTECHNICAL ENGINEERING SERVICES
PAVEMENT EVALUATION & ENGINEERING
CHELONIA PARKWAY
ORANGE COUNTY, FLORIDA
PROJECT NO. 07573081
DATE: 7/12/2023

intertek psi

PAVEMENT CORE PHOTOGRAPHS

- **Asphalt:** 2.25 inches
- **Pavement Base:** 8.75 inches of soil cement

SHEET NO.:	
DRAWN BY:	P.C.
CHECKED BY:	B.G.

GEOTECHNICAL ENGINEERING SERVICES
PAVEMENT EVALUATION & ENGINEERING
CHELONIA PARKWAY
ORANGE COUNTY, FLORIDA
PROJECT NO. 07573081
DATE: 7/12/2023

intertek psi

PAVEMENT CORE PHOTOGRAPHS

- **Asphalt:** 2.5 inches
- **Pavement Base:** 7 inches of concrete

SHEET NO.:	
DRAWN BY:	P.C.
CHECKED BY:	B.G.

GEOTECHNICAL ENGINEERING SERVICES
PAVEMENT EVALUATION & ENGINEERING
CHELONIA PARKWAY
ORANGE COUNTY, FLORIDA
PROJECT NO. 07573081
DATE: 7/12/2023

intertek psi

PAVEMENT CORE PHOTOGRAPHS

- **Asphalt:** 2.25 inches
- **Pavement Base:** 7.75 inches of soil cement

SHEET NO.:	
DRAWN BY:	P.C.
CHECKED BY:	B.G.

GEOTECHNICAL ENGINEERING SERVICES
PAVEMENT EVALUATION & ENGINEERING
CHELONIA PARKWAY
ORANGE COUNTY, FLORIDA
PROJECT NO. 07573081
DATE: 7/12/2023

intertek psi

PAVEMENT CORE PHOTOGRAPHS

- **Asphalt:** 2 inches
- **Pavement Base:** 7.75 inches of soil cement

SHEET NO.:	
DRAWN BY:	P.C.
CHECKED BY:	B.G.

GEOTECHNICAL ENGINEERING SERVICES
PAVEMENT EVALUATION & ENGINEERING
CHELONIA PARKWAY
ORANGE COUNTY, FLORIDA
PROJECT NO. 07573081
DATE: 7/12/2023

intertek psi

PAVEMENT CORE PHOTOGRAPHS

- **Asphalt:** 2 inches
- **Pavement Base:** 7.75 inches of soil cement

SHEET NO.:	
DRAWN BY:	P.C.
CHECKED BY:	B.G.

GEOTECHNICAL ENGINEERING SERVICES
PAVEMENT EVALUATION & ENGINEERING
CHELONIA PARKWAY
ORANGE COUNTY, FLORIDA
PROJECT NO. 07573081
DATE: 7/12/2023

intertek psi

PAVEMENT CORE PHOTOGRAPHS

- **Asphalt:** 2.75 inches
- **Pavement Base:** 8.25 inches of soil cement

SHEET NO.:	
DRAWN BY:	P.C.
CHECKED BY:	B.G.

GEOTECHNICAL ENGINEERING SERVICES
PAVEMENT EVALUATION & ENGINEERING
CHELONIA PARKWAY
ORANGE COUNTY, FLORIDA
PROJECT NO. 07573081
DATE: 7/12/2023

intertek psi

PAVEMENT CORE PHOTOGRAPHS

- **Asphalt:** 2 inches
- **Pavement Base:** 10 inches of sandy limerock

SHEET NO.:	
DRAWN BY:	P.C.
CHECKED BY:	B.G.

GEOTECHNICAL ENGINEERING SERVICES
PAVEMENT EVALUATION & ENGINEERING
CHELONIA PARKWAY
ORANGE COUNTY, FLORIDA
PROJECT NO. 07573081
DATE: 7/12/2023

intertek psi

PRELIMINARY ENGINEER'S OPINION OF PROBABLE COST
BONNET CREEK RESORT - CHELONIA PARKWAY REPAVING
TWO LANE PHASE 2
August 16, 2023

ITEM	DESCRIPTION	QUANTITY	UNIT	UNIT PRICE	AMOUNT
100	**PRELIMINARIES**				
101	Performance & Payment Bond (Est. 1%)	1	LS	$3,500.00	$3,500.00
102	Geotechnical Testing (Orange Cty.Std, Est.)	1	LS	6,500.00	6,500.00
103	Permit Fees (Est.)	1	LS	5,000.00	5,000.00
	Subtotal				$15,000.00
200	**PAVING - 2 LANE SECTION**				
201	2" FDOT Asphalt Type SP 12.5 In place, Compacted	6,816	SY	22.00	149,952.00
202	Milling Existing Pavement Between 1" - 2"	6,816	SY	5.50	37,488.00
203	Base Repair (4" SP 12.5) (10% Allowance)	680	SY	47.25	32,130.00
204	Pavement Marking (6" Paint; Yellow/White)	7,091	LF	1.55	10,991.05
	Subtotal				$230,561.05
2100	**OTHER**				
2101	Construction Administration (Allowance)	1	LS	6,000.00	6,000.00
	Subtotal				$6,000.00
	TOTAL				$251,561.05
	CONTINGENCY @ 15%				37,734.16
	GRAND TOTAL				$289,295.21

NOTE: Any opinion of the construction cost prepared by DWMA represents its judgment as a design professional and is supplied for the general guidance of the client since DWMA has no control over the cost of labor and material or over competitive bidding or market conditions. DWMA does not guarantee the accuracy of such opinions as compared to contractor bids or actual cost to the client. This opinion is provided for the specific purpose of conforming with Orange County commercial site plan requirements and is not authorized for any other use.

PRELIMINARY ENGINEER'S OPINION OF PROBABLE COST
BONNET CREEK RESORT - CHELONIA PARKWAY REPAVING
FOUR LANE PHASE 1
August 16, 2023

ITEM	DESCRIPTION	QUANTITY	UNIT	UNIT PRICE	AMOUNT
100	**PRELIMINARIES**				
101	Performance & Payment Bond (Est.)	1	LS	$12,500.00	$12,500.00
102	Geotechnical Testing (Orange Cty.Std, Est.)	1	LS	12,500.00	12,500.00
103	Permit Fees (Est.)	1	LS	5,000.00	5,000.00
	Subtotal				$30,000.00
200	**PAVING - 4 LANE SECTION**				
201	2" FDOT Asphalt Type SP 12.5 In place, Compacted	36,504	SY	22.00	803,088.00
202	Milling Existing Pavement Between 1" - 2"	36,504	SY	5.50	200,772.00
203	Base Repair (4" SP 12.5) (10% Allowance)	3,650	SY	47.25	172,462.50
204	Pavement Marking (6" Paint; Yellow/White)	40,148	LF	1.55	62,229.40
205	Pavement Marking (Paint Arrows and Messages (white))	44	EA	110.00	4,840.00
	Subtotal				$1,243,391.90
2100	**OTHER**				
2101	Construction Administration (Allowance)	1	LS	8,000.00	8,000.00
	Subtotal				$8,000.00
	TOTAL				$1,281,391.90
	CONTINGENCY @ 15%				192,208.79
	GRAND TOTAL				$1,473,600.69

NOTE: Any opinion of the construction cost prepared by DWMA represents its judgment as a design professional and is supplied for the general guidance of the client since DWMA has no control over the cost of labor and material or over competitive bidding or market conditions. DWMA does not guarantee the accuracy of such opinions as compared to contractor bids or actual cost to the client. This opinion is provided for the specific purpose of conforming with Orange County commercial site plan requirements and is not authorized for any other use.

SECTION 5

SECTION A

RESOLUTION 2023-08

THE ANNUAL APPROPRIATION RESOLUTION OF THE BONNET CREEK RESORT COMMUNITY DEVELOPMENT DISTRICT (THE "DISTRICT") RELATING TO THE ANNUAL APPROPRIATIONS AND ADOPTING THE BUDGET FOR THE FISCAL YEAR BEGINNING OCTOBER 1, 2023, AND ENDING SEPTEMBER 30, 2024.

WHEREAS, the District Manager has, prior to the fifteenth (15th) day in June, 2023, submitted to the Board of Supervisors (the "Board") a proposed budget for the next ensuing budget year along with an explanatory and complete financial plan for each fund of the Bonnet Creek Resort Community Development District, pursuant to the provisions of Section 190.008(2)(a), Florida Statutes; and

WHEREAS, at least sixty (60) days prior to the adoption of the proposed annual budget (the "Proposed Budget"), the District filed a copy of the Proposed Budget with the local governing authorities having jurisdiction over the area included in the District pursuant to the provisions of Section 190.008(2)(b), Florida Statutes; and

WHEREAS, the Board set September 1, 2023, as the date for a public hearing thereon and caused notice of such public hearing to be given by publication pursuant to Section 190.008(2)(a), Florida Statutes; and

WHEREAS, Section 190.008(2)(a), Florida Statutes, requires that, prior to October 1, of each year, the District Board by passage of the Annual Appropriation Resolution shall adopt a budget for the ensuing fiscal year and appropriate such sums of money as the Board deems necessary to defray all expenditures of the District during the ensuing fiscal year; and

WHEREAS, the District Manager has prepared a Proposed Budget, whereby the budget shall project the cash receipts and disbursements anticipated during a given time period, including reserves for contingencies for emergency or other unanticipated expenditures during the fiscal year.

NOW, THEREFORE, BE IT RESOLVED BY THE BOARD OF SUPERVISORS OF BONNET CREEK RESORT COMMUNITY DEVELOPMENT DISTRICT;

Section 1. Budget

a. That the Board of Supervisors has reviewed the District Manager's Proposed Budget, a copy of which is on file with the office of the District Manager and at the District's Records Office, and hereby approves certain amendments thereto, as shown in Section 2 below.

b. That the District Manager's Proposed Budget, attached hereto as Exhibit "A," as amended by the Board, is hereby adopted in accordance with the provisions of

Section 190.008(2)(a), Florida Statutes, and incorporated herein by reference; provided, however, that the comparative figures contained in the adopted budget may be subsequently revised as deemed necessary by the District Manager to reflect actual revenues and expenditures for Fiscal Year 2023 and/or revised projections for Fiscal Year 2024.

c. That the adopted budget, as amended, shall be maintained in the office of the District Manager and at the District's Records Office and identified as "The Budget for Bonnet Creek Resort Community Development District for the Fiscal Year Ending September 30, 2024," as adopted by the Board of Supervisors on September 7, 2023.

Section 2. Appropriations

There is hereby appropriated out of the revenues of the Bonnet Creek Resort Community Development District, for the fiscal year beginning October 1, 2023, and ending September 30, 2024, the sum of **$_____** to be raised by the levy of assessments and/or otherwise, which sum is deemed by the Board of Supervisors to be necessary to defray all expenditures of the District during said budget year, to be divided and appropriated in the following fashion:

TOTAL GENERAL FUND	**$_____**
DEBT SERVICE FUND – SERIES 2016	**$_____**
CAPITAL PROJECTS FUND	**$_____**
TOTAL ALL FUNDS	**$_____**

Section 3. Supplemental Appropriations

The Board may authorize by resolution, supplemental appropriations or revenue changes for any lawful purpose from funds on hand or estimated to be received within the fiscal year as follows:

a. Board may authorize a transfer of the unexpended balance or portion thereof of any appropriation item.

b. Board may authorize an appropriation from the unappropriated balance of any fund.

c. Board may increase any revenue or income budget amount to reflect receipt of any additional unbudgeted monies and make the corresponding change to appropriations or the unappropriated balance.

The District Manager and Treasurer shall have the power within a given fund to authorize the transfer of any unexpected balance of any appropriation item or any portion thereof, provided such transfers do not exceed Ten Thousand ($10,000) Dollars or have the effect of causing more

than 10% of the total appropriation of a given program or project to be transferred previously approved transfers included. Such transfer shall not have the effect of causing a more than $10,000 or 10% increase, previously approved transfers included, to the original budget appropriation for the receiving program. Transfers within a program or project may be approved by the Board of Supervisors. The District Manager or Treasurer must establish administrative procedures which require information on the request forms proving that such transfer requests comply with this section.

Introduced, considered favorably, and adopted this 7st day of September, 2023.

ATTEST:

BONNET CREEK RESORT COMMUNITY DEVELOPMENT DISTRICT

_____
Secretary

By:_____

Its:_____

Bonnet Creek Resort

Community Development District

Proposed Budget

FY 2024

Table of Contents

Bonnet Creek Resort

Community Development District

Proposed Budget

General Fund

	Adopted Budget FY2023	Actuals Thru 7/31/23	Projected Next 2 Months	Projected Thru 9/30/23	Proposed Budget FY2024
Revenues					
Maintenance Assessments - Off Roll	$ 944,764	$ 745,278	$ 199,485	$ 944,764	$ 2,099,316
Interest Income	$ 100	$ 731	$ 160	$ 891	$ 1,000
Reuse Water Fees - Wyndham	$ 10,000	$ 11,500	$ 2,000	$ 13,500	$ 13,000
Reuse Water Fees - Golf Course	$ 27,000	$ 22,186	$ 4,500	$ 26,686	$ 27,000
Reuse Water Fees - Signia by Hilton & Waldorf Astoria	$ 4,000	$ 3,519	$ 900	$ 4,419	$ 5,000
Reuse Water Fees - Marriott	$ 2,000	$ 3,355	$ 700	$ 4,055	$ 4,500
Carry Forward Surplus	$ -	$ 16,671	$ -	$ 16,671	$ -
Total Revenues	**$ 987,864**	**$ 803,241**	**$ 207,745**	**$ 1,010,986**	**$ 2,149,816**
Expenditures					
General & Administrative					
Supervisor Fees	$ 8,000	$ 4,200	$ 1,600	$ 5,800	$ 8,000
Engineering Fees	$ 20,000	$ 25,982	$ 4,000	$ 29,982	$ 20,000
Trustee Fees	$ 6,000	$ 5,388	$ -	$ 5,388	$ 6,000
Legal Services	$ 20,000	$ 9,659	$ 3,000	$ 12,659	$ 20,000
Assessment Roll Services	$ 3,000	$ 3,000	$ -	$ 3,000	$ 3,180
Auditing Services	$ 3,225	$ 3,225	$ -	$ 3,225	$ 3,225
Arbitrage Rebate Calculation	$ 450	$ 450	$ -	$ 450	$ 450
District Management Fees	$ 35,596	$ 29,663	$ 5,933	$ 35,596	$ 37,732
Information Technology	$ 1,250	$ 1,042	$ 208	$ 1,250	$ 1,350
Website Maintenance	$ 813	$ 678	$ 135	$ 813	$ 900
Insurance - Professional Liability	$ 8,562	$ 7,670	$ -	$ 7,670	$ 8,562
Telephone	$ 100	$ -	$ -	$ -	$ 100
Legal Advertising	$ 2,100	$ 782	$ 1,500	$ 2,282	$ 2,100
Postage	$ 1,900	$ 224	$ 40	$ 264	$ 1,900
Printing & Binding	$ 1,200	$ 27	$ 10	$ 37	$ 1,200
Office Supplies	$ 300	$ 4	$ 2	$ 6	$ 300
Dues, Licenses & Subscriptions	$ 175	$ 175	$ -	$ 175	$ 175
Contingency	$ 2,000	$ 131	$ 500	$ 631	$ 2,000
Total Administrative:	**$ 114,671**	**$ 92,298**	**$ 16,928**	**$ 109,227**	**$ 117,174**

Bonnet Creek Resort

Community Development District

Proposed Budget

General Fund

	Adopted Budget FY2023	Actuals Thru 7/31/23	Projected Next 2 Months	Projected Thru 9/30/23	Proposed Budget FY2024
Operations & Maintenance					
Field Management	$ 56,976	$ 47,480	$ 9,496	$ 56,976	$ 56,976
Utility Services					
Utility Services	$ 14,000	$ 10,646	$ 2,400	$ 13,046	$ 14,000
Street Lights - Usage	$ 4,200	$ 3,487	$ 1,290	$ 4,777	$ 5,400
Street Lights - Lease & Maintenance Agreement	$ 66,000	$ 35,333	$ 12,000	$ 47,333	$ 66,000
Water Service - Reuse Water	$ 43,000	$ 35,402	$ 8,000	$ 43,402	$ 43,000
SFWMD Water Use Compliance Report	$ 5,000	$ -	$ -	$ -	$ 5,000
Stormwater Control - Bonnet Creek Resort					
Oc/Dep Quarterly Well Monitoring Report	$ 1,500	$ 1,092	$ 364	$ 1,456	$ 1,500
Wetland & Upland Monitoring Services - (Bda)	$ 3,000	$ 721	$ 1,500	$ 2,221	$ 5,000
Pond & Embankment Aquatic Treatment - (Awc)	$ 15,396	$ 10,164	$ 5,082	$ 15,246	$ 15,858
Irrigation Pond Treatment - Solitude	$ 2,926	$ 2,341	$ 468	$ 2,809	$ 2,892
Nuisance/Exotic Species Maintenance - (Awc)	$ 11,000	$ -	$ 4,000	$ 4,000	$ 11,000
Stormwater Control - Crosby Island Marsh					
Nuisance/Exotic Species Maintenance - (Awc)	$ 7,500	$ 2,500	$ 2,500	$ 5,000	$ 7,725
Nuisance/Exotic Species Maintenance - (Bda)	$ 4,500	$ 2,492	$ 1,000	$ 3,492	$ 4,500
Embankment Mowing - (A. E. Smith)	$ 6,000	$ 850	$ 5,150	$ 6,000	$ 6,000
Other Physical Environment					
Property Insurance	$ 12,500	$ 13,268	$ -	$ 13,268	$ 19,902
Entry, Fence, Walls & Gates Maintenance	$ 24,500	$ -	$ 5,000	$ 5,000	$ 24,500
Pump Station Maintenance	$ 4,000	$ 2,919	$ 1,945	$ 4,864	$ 4,000
Pump Station Repairs	$ 7,500	$ 527	$ 2,500	$ 3,027	$ 7,500
Landscape & Irrigation Maintenance	$ 198,000	$ 165,000	$ 33,000	$ 198,000	$ 207,900
Irrigation Repairs	$ 3,500	$ 1,864	$ 1,500	$ 3,364	$ 3,500
Landscape Replacement	$ 15,000	$ 16,686	$ 2,500	$ 19,186	$ 15,000
Lift Station Maintenance	$ 5,000	$ 5,915	$ 315	$ 6,230	$ 5,000
Road & Street Facilities					
Roadway Repair & Maintenance	$ 10,400	$ 2,910	$ 5,000	$ 7,910	$ 10,400
Highway Directional Signage - (R&M)	$ 5,000	$ -	$ 1,000	$ 1,000	$ 5,000
Roadway Directory Signage - (R&M)	$ 5,000	$ -	$ 5,000	$ 5,000	$ 5,000
Sidewalk/Curb Cleaning	$ 12,000	$ 646	$ 12,000	$ 12,646	$ 12,000
Contingency	$ 16,000	$ 20,556	$ 5,000	$ 25,556	$ 16,000
Total Operations & Maintenance:	**$ 559,398**	**$ 382,799**	**$ 128,010**	**$ 510,809**	**$ 580,553**
Total Expenditures	**$ 674,069**	**$ 475,097**	**$ 144,938**	**$ 620,036**	**$ 697,727**
Other Financing Uses					
Transfer Out - Capital Reserve	$ 313,795	$ -	$ 390,950	$ 390,950	$ 1,452,089
Total Other Financing Sources (Uses)	**$ 313,795**	**$ -**	**$ 390,950**	**$ 390,950**	**$ 1,452,089**
Total Expenditures & Other Financing Uses	**$ 987,864**	**$ 475,097**	**$ 535,889**	**$ 1,010,986**	**$ 2,149,816**
Net Change in Fund Balance	$ -	$ 328,144	$ (328,144)	$ 0	$ -

Bonnet Creek Resort
Community Development District

General Fund Budget
FISCAL YEAR 2024

REVENUES:

Maintenance Assessments – Off Roll
The District levies Non-Ad Valorem Assessments on all of the assessable property within the District to pay for operating expenditures incurred during the fiscal year. It will be directly billed from the District to the appropriate property owner.

Interest Income
The District will invest surplus funds with State Board of Administration, Regions Bank, and Truist Bank.

Reuse Water Fees
The District pays Orange County Utilities Department for monthly reclaimed commercial water usage then bills Wyndham, Golf Course, Signia by Hilton, the Waldorf Astoria, and Marriott for their portion based on individual meter readings to reimburse the cost of the reuse water.

EXPENDITURES:

GENERAL & ADMINISTRATIVE

Supervisor Fees
The District may compensate its supervisors within the appropriate statutory limits of $200 maximum per meeting within an annual cap of $4,800 per supervisor. The amount is based upon 5 Supervisors attending 8 monthly meetings during the fiscal year.

Engineering Fees
The District's engineer, Donald W. McIntosh, provides general engineering services to the District. Among these services are attendance at and preparation for monthly board meetings, review of construction invoices and all other engineering services requested by the district throughout the year.

Trustee Fees
The District issued Series 2016 Special Assessment Refunding Bonds that are deposited with a Trustee at US Bank, N.A.

Legal Services
The District's legal counsel, Latham, Luna, Eden & Beaudine LLP, provides general legal services to the District. Among these services are attendance at and preparation for monthly board meetings, review of operating and maintenance contracts and all other legal services requested by the district throughout the year.

Bonnet Creek Resort
Community Development District

General Fund Budget
FISCAL YEAR 2024

Assessment Roll Services
The District has contracted with Governmental Management Services - Central Florida, LLC for the collection of prepaid assessments, maintaining Lien Book, updating the District's Tax Roll and levying the annual assessment.

Auditing Services
The District is required annually to conduct an audit of its financial records by an Independent Certified Public Accounting firm once it reaches certain revenue and expenditure levels, or has issued bonds and incurred debt. The District is contracted with Berger, Toombs, Elam, Gaines & Frank

Arbitrage Rebate Calculation
The District is required to calculate the interest earned from bond proceeds each year pursuant to the Internal Revenue Code of 1986. The Rebate Analyst is required to verify that the District has not received earnings higher than the yield of the bonds. The District is contracted with AMTEC.

District Management Fees
The District has contracted with Governmental Management Services – Central Florida, LLC to provide Management, Accounting and Recording Secretary Services for the District. The services include, but are not limited to, recording and transcription of board meetings, administrative services, budget preparation, all financials reporting, annual audits, etc.

Information Technology
Represents various cost of information technology with Governmental Management Services – Central Florida, LLC for the District such as video conferencing, cloud storage and servers, positive pay implementation and programming for fraud protection, accounting software, tablets for meetings, Adobe, Microsoft Office, etc.

Website Maintenance
Represents the costs with Governmental Management Services – Central Florida, LLC associated with monitoring and maintaining the District's website created in accordance with Chapter 189, Florida Statutes. These services include site performance assessments, security and firewall maintenance, updates, document uploads, hosting and domain renewals, website backups, etc.

Insurance – Professional Liability
The District's general liability and public officials liability coverage are provided by Florida Insurance Alliance (FIA). FIA specializes in providing insurance coverage to governmental agencies.

Telephone
Telephone and fax machine.

Legal Advertising
The District will incur expenditures related to legal advertising. The items for which the District will advertise include, but are not limited to meeting schedules, special meeting notices, and public hearings, bidding etc. for the District based on statutory guidelines.

Postage
Mailing of Board Meeting Agenda's, checks for vendors, and any other required correspondence.

Printing & Binding
Printing and binding agenda packages for board meetings, printing of computerized checks, correspondence, stationary, etc.

Office Supplies
Any supplies that may need to be purchased during the Fiscal Year, e.g., paper, minute books, file folders, labels, paper clips, etc.

Dues, Licenses & Subscriptions
The District is required to pay an annual fee of $175 to the Department of Economic Opportunity. This is the only expenditure for this line item.

Contingency
Accounts for any fees or expenditures relating to the district that do not fall under the other budgeted administrative expenditures including bank fees.

OPERATIONS & MAINTENANCE

Field Management
The District has contracted with Governmental Management Services - Central Florida for general maintenance services.

Description	Monthly	Annually
Field Management	$4,748	$56,976
TOTAL		**$56,976**

Bonnet Creek Resort
Community Development District

General Fund Budget
FISCAL YEAR 2024

Utility Services

Utility Services

The District will incur electric utility expenditures for general purposes such as irrigation timers, lift station pumps, fountains, etc. The District maintains the following accounts with Duke Energy.

Description	Monthly	Annually
13251 Chelonia Parkway Ct Sign 1	$30	$360
13251 Chelonia Parkway Ct Sign 2	$30	$360
13251 Chelonia Parkway Ct Sign 3	$30	$360
13251 Chelonia Parkway Ct Sign 4	$30	$360
13251 Chelonia Parkway Ct Entrance Sign	$92	$1,100
13252 Chelonia Parkway Ct Sign 5	$30	$360
14064 Chelonia Parkway Ct Pump	$25	$300
14901 Chelonia Parkway Lift	$200	$2,400
14312 Chelonia Parkway	$700	$8,400
TOTAL		**$14,000**

Street Lights - Usage

The District may have expenditures relating to streetlights throughout the community. These may be restricted to main arterial roads or in some cases to all streetlights within the District's boundaries. The District maintains the following account with Duke Energy.

Description	Monthly	Annually
000 Chelonia Parkway Ct Lite	$450	$5,400
TOTAL		**$5,400**

Street Lights – Lease & Maintenance Agreement

The District may budget for its streetlights lease separately. The District maintains the following account with Duke Energy.

Description	Monthly	Annually
000 Chelonia Parkway Ct Lite	$5,500	$66,000
TOTAL		**$66,000**

Water Service – Reuse Water
The District may incur expenditures related to the use of reclaimed water for irrigation. The District maintains the following account with Orange County Utilities.

Description	Monthly	Annually
14064 Chelonia Parkway	$3,583	$43,000
TOTAL		**$43,000**

SFWMD Water Use Compliance Report
Expenditures related for compliance reporting for the application of Consumptive Water Use Permits with South Florida Water Management District.

Stormwater Control – Bonnet Creek Resort

OC/Dep Quarterly Well Monitoring Report
The District expenditures related to quarterly well monitoring report.

Wetland & Upland Monitoring Services - (BDA)
Include reviews of nuisance/exotic (N/E) plant species maintenance associated with the on-site wetland and upland preservation areas.

Description	Annually
BDA Environmental Consultants	$5,000
TOTAL	**$5,000**

Pond & Embankment Aquatic Treatment – (AWC)
1) Provide chemical/manual treatments 9 times per year to control undesirable aquatic plants and algae growing in pond 2. Control nuisance and exotic species growing along 6811 If of fence line. Control nuisance and exotic species growing along 33418 If of slopes and wetland edges to 15' in. Control of all vegetation growing within 5' of outfall structures.

2) Selective spot spraying techniques will be utilized to avoid impacting native vegetation.

3) Provide chemical treatment with aquatic approved herbicides supervised by state licensed natural area applicators.

Irrigation Pond Treatment – (Solitude)
The District has contract with Solitude Lake Management to provide pond maintenance services on one irrigation pond. Services include aquatic weed control, shoreline weed control and water quality monitoring.

Description	Monthly	Annually
Solitude Lake Management	$241	$2,892
TOTAL		**$2,892**

Nuisance/Exotic Species Maintenance – (AWC)
Includes supervisory oversight of the nuisance/exotic *(N/E)* plant species management (to include the hand-removal and or herbicide treatment of *N/E* plant species) and maintenance if necessary.

Description	Quarterly	Annually
Aquatic Weed Control (Wetlands)	$2,750	$11,000
TOTAL		**$11,000**

Stormwater Control – Crosby Island Marsh

Nuisance/Exotic Species Maintenance – (AWC)
1) Provide chemical/manual treatments to control nuisance and exotic species within Crosby Island Mitigation Site 3 times per ear. Treatments to be completed with a combination of airboat in the wet season and field crews during the dry season.

2) Selective spot spraying techniques will be utilized to avoid impacting native vegetation.

3) Provide chemical treatment with aquatic approved herbicides supervised by state licensed natural area applicators.

Description	Per Visit	Annually
Aquatic Weed Control (Wetlands) – 3 Visits	$2,575	$7,725
TOTAL		**$7,725**

Nuisance/Exotic Species Maintenance – (BDA)
Includes supervisory oversight of the nuisance/exotic *(N/E)* plant species management (to include the hand-removal and or herbicide treatment of *N/E* plant species) and maintenance.

Description	Annually
BDA Environmental Consultants	$4,500
TOTAL	**$4,500**

Embankment Mowing
Mowing of conservation berms surrounding wetland and mitigation areas.

Other Physical Environment

Property Insurance
Represents the District's share of the annual coverage of property insurance. Coverage is provided by Florida Insurance Alliance. FIA specializes in providing insurance coverage to governmental agencies.

Entry, Fence, Walls & Gates Maintenance
The District will incur expenditures to maintain the entry monuments and the fencing.

Pump Station Maintenance
Expenditures incurred for Pump station maintenance.

Pump Station Repairs
Expenditures incurred for Pump station repairs.

Landscape & Irrigation Maintenance
The District contracted with Yellowstone Landscape to maintain the rights-of-way, median strips, recreational facilities including pond banks, entryways, and similar planting areas within the District. These services include but are not limited to monthly landscape maintenance, fertilizer, pesticides, annuals, mulch, and irrigation Maintenance.

Description	Monthly	Annually
Yellowstone - Landscape Maintenance	$17,325	$207,900
TOTAL		**$207,900**

Irrigation Repairs
Expenditures incurred for irrigation repairs.

Landscape Replacement
Expenditures related to replacement of turf, trees, shrubs etc.

Lift Station Maintenance
Expenditures incurred for yearly preventative maintenance and any additional repairs to the lift station and generator.

Description	Quarterly	Annually
Lift Station Preventative Maintenance	$300	$1,200
Generator Preventative Maintenance		$1,250
Contingency		$2,550
TOTAL		**$5,000**

Road & Street Facilities

Roadway Repair and Maintenance
Expenditures related to the repair and maintenance of roadways owned by the District if any.

Highway Directional Signage – (R&M)
Highway Directional Signage expenditures which may not fit into any defined category in this section of the budget.

Roadway Directional Signage – (R&M)
Roadway Directional Signage expenditures which may not fit into any defined category in this section of the budget.

Sidewalk/Curb Cleaning
Estimated cost for pressure washing the District owned sidewalks throughout the community.

Contingency
Monies collected and allocated for expenditures that the District could incur miscellaneous throughout the year, which may not fit into any standard categories.

Transfer Out - Capital Reserve
Monies collected and allocated for the future repair and replacement of various capital improvements.

Bonnet Creek Resort

Community Development District

Proposed Budget

Debt Service Fund Series 2016

Description	Adopted Budget FY2023	Actuals Thru 7/31/23	Projected Next 2 Months	Projected Thru 9/30/23	Proposed Budget FY2024
Revenues					
Assessments - Direct Billed	$ 2,110,462	$ 2,101,025	$ -	$ 2,101,025	$ 2,110,462
Interest Income	$ -	$ 39,925	$ 6,000	$ 45,925	$ -
Carry Forward Surplus	$ 12,778	$ 15,543	$ -	$ 15,543	$ 61,468
Total Revenues	**$ 2,123,240**	**$ 2,156,493**	**$ 6,000**	**$ 2,162,493**	**$ 2,171,929**
Expenditures					
General & Administrative:					
Interest - 11/1	$ 433,013	$ 433,013	$ -	$ 433,013	$ 405,225
Principal - 5/1	$ 1,235,000	$ 1,235,000	$ -	$ 1,235,000	$ 1,295,000
Interest - 5/1	$ 433,013	$ 433,013	$ -	$ 433,013	$ 405,225
Total Expenditures	**$ 2,101,025**	**$ 2,101,025**	**$ -**	**$ 2,101,025**	**$ 2,105,450**
Net Change in Fund Balance	$ 22,215	$ 55,468	$ 6,000	$ 61,468	$ 66,479

Bonnet Creek

Community Development District

Series 2016 Special Assessment Bonds

Amortization Schedule

Date	Balance	Principal	Interest	Total
11/01/23	$ 18,010,000.00	$ -	$ 405,225.00	$ 2,105,450.00
05/01/24	$ 18,010,000.00	$ 1,295,000.00	$ 405,225.00	
11/01/24	$ 16,715,000.00	$ -	$ 376,087.50	$ 2,107,175.00
05/01/25	$ 16,715,000.00	$ 1,355,000.00	$ 376,087.50	
11/01/25	$ 15,360,000.00	$ -	$ 345,600.00	$ 2,106,200.00
05/01/26	$ 15,360,000.00	$ 1,415,000.00	$ 345,600.00	
11/01/26	$ 13,945,000.00	$ -	$ 313,762.50	$ 2,107,525.00
05/01/27	$ 13,945,000.00	$ 1,480,000.00	$ 313,762.50	
11/01/27	$ 12,465,000.00	$ -	$ 280,462.50	$ 2,110,925.00
05/01/28	$ 12,465,000.00	$ 1,550,000.00	$ 280,462.50	
11/01/28	$ 10,915,000.00	$ -	$ 245,587.50	$ 2,111,175.00
05/01/29	$ 10,915,000.00	$ 1,620,000.00	$ 245,587.50	
11/01/29	$ 9,295,000.00	$ -	$ 209,137.50	$ 2,113,275.00
05/01/30	$ 9,295,000.00	$ 1,695,000.00	$ 209,137.50	
11/01/30	$ 7,600,000.00	$ -	$ 171,000.00	$ 2,117,000.00
05/01/31	$ 7,600,000.00	$ 1,775,000.00	$ 171,000.00	
11/01/31	$ 5,825,000.00	$ -	$ 131,062.50	$ 2,117,125.00
05/01/32	$ 5,825,000.00	$ 1,855,000.00	$ 131,062.50	
11/01/32	$ 3,970,000.00	$ -	$ 89,325.00	$ 2,118,650.00
05/01/33	$ 3,970,000.00	$ 1,940,000.00	$ 89,325.00	
11/01/33	$ 2,030,000.00	$ -	$ 45,675.00	$ 2,121,350.00
05/01/34	$ 2,030,000.00	$ 2,030,000.00	$ 45,675.00	
		$ 18,010,000.00	**$ 5,225,850.00**	**$ 23,235,850.00**

Bonnet Creek Resort

Community Development District

Proposed Budget

Capital Projects Fund

Description	Adopted Budget FY2023	Actuals Thru 7/31/23	Projected Next 2 Months	Projected Thru 9/30/23	Proposed Budget FY2024
Revenues					
Transfer In - Capital Projects	$ 313,795	$ -	$ 390,950	$ 390,950	$ 1,452,089
Interest Income	$ 50	$ 10,837	$ -	$ 10,837	$ 50
Carry Forward Surplus	$ 526,392	$ 578,452	$ -	$ 578,452	$ 672,861
Total Revenues	**$ 840,237**	**$ 589,290**	**$ 390,950**	**$ 980,240**	**$ 2,125,000**
Expenditures					
General & Administrative:					
Chelonia Parkway Paving	$ -	$ -	$ -	$ -	$ 1,800,000
Offsite Wayfinding Signs	$ -	$ -	$ -	$ -	$ 125,000
Irrigation Improvement	$ -	$ -	$ 26,864	$ 26,864	$ -
Entry Monument	$ -	$ 70,475	$ 210,000	$ 280,475	$ -
Crosby Island Berm Repair	$ -	$ -	$ -	$ -	$ 150,000
Contingency	$ 840,237	$ 40	$ -	$ 40	$ 50,000
Total Expenditures	**$ 840,237**	**$ 70,515**	**$ 236,864**	**$ 307,379**	**$ 2,125,000**
Net Change in Fund Balance	$ -	$ 518,775	$ 154,086	$ 672,861	$ 0

BONNET CREEK RESORT
COMMUNITY DEVELOPMENT DISTRICT

FISCAL YEAR 2023/2024 O&M & DEBT SERVICE ASSESSMENT SCHEDULE

Total O & M Assessment	$2,099,316
Total DS Assessment	$2,110,462

PRODUCT TYPE (PARCEL)	ALLOCATION OF ASSESSMENTS	TOTAL OPERATIONS AND MAINTENANCE ASSESSMENT	ALLOCATION OF DEBT ASSESSMENTS	TOTAL SERIES 2016 DEBT SERVICE ASSESSMENT	TOTAL FY 2023/2024 ASSESSMENT PER PARCEL
Timeshare (A)	36.10%	$757,916.20	0.00%	$0.00	$757,916.20
Timeshare (B)	5.29%	$110,978.78	8.27%	$174,610.27	$285,589.05
Hotel (B)	6.61%	$138,860.88	10.35%	$218,479.04	$357,339.92
Hotel (C/D)	20.83%	$437,245.62	32.60%	$687,906.28	$1,125,151.90
Timeshare (E)	17.28%	$362,656.91	27.04%	$570,577.65	$933,234.56
Hotel (F)	8.93%	$187,384.98	13.97%	$294,816.96	$482,201.94
Golf Course (G)	4.97%	$104,273.05	7.77%	$164,071.33	$268,344.38
	100.00%	$2,099,316.42	100.00%	$2,110,461.53	$4,209,777.95

FISCAL YEAR 2022/2023 O&M & DEBT SERVICE ASSESSMENT SCHEDULE

Timeshare (A)	36.10%	$341,088.07	0.00%	$0.00	$341,088.07
Timeshare (B)	5.29%	$49,944.23	8.27%	$174,610.27	$224,554.50
Hotel (B)	6.61%	$62,492.12	10.35%	$218,479.04	$280,971.16
Hotel (C/D)	20.83%	$196,775.40	32.60%	$687,906.28	$884,681.68
Timeshare (E)	17.28%	$163,207.95	27.04%	$570,577.65	$733,785.60
Hotel (F)	8.93%	$84,329.62	13.97%	$294,816.96	$379,146.58
Golf Course (G)	4.97%	$46,926.42	7.77%	$164,071.33	$210,997.75
	100.00%	$944,763.81	100.00%	$2,110,461.53	$3,055,225.34

FISCAL YEAR 2023/2024 O&M & DEBT SERVICE ASSESSMENT INCREASE

Timeshare (A)	36.10%	$416,828.13	0.00%	$0.00	$416,828.13
Timeshare (B)	5.29%	$61,034.55	8.27%	$0.00	$61,034.55
Hotel (B)	6.61%	$76,368.76	10.35%	$0.00	$76,368.76
Hotel (C/D)	20.83%	$240,470.22	32.60%	$0.00	$240,470.22
Timeshare (E)	17.28%	$199,448.96	27.04%	$0.00	$199,448.96
Hotel (F)	8.93%	$103,055.36	13.97%	$0.00	$103,055.36
Golf Course (G)	4.97%	$57,346.63	7.77%	$0.00	$57,346.63
	100.00%	$1,154,552.61	100.00%	$0.00	$1,154,552.61

BONNET CREEK RESORT
COMMUNITY DEVELOPMENT DISTRICT

FISCAL YEAR 2023/2024 O & M & DEBT SERVICE SCHEDULE

2022/2023 O & M Budget	$944,764
2023/2024 O & M Budget	$2,099,316
Total Difference	$1,154,553

2022/2023 Debt Service Assessment	$2,110,462
2023/2024 Debt Service Assessment	$2,110,462
Total Difference	$0

PER UNIT ANNUAL ASSESSMENT

	2020/2021	2021/2022	2022/2023	2023/2024	Proposed Increase/Decrease	
Debt Service - Parcel A	$0	$0	$0	$0	$0	0%
Operations/Maintenance - Parcel A	$310,080	$310,080	$341,088	$757,916	$416,828	122%
Total	$310,080	$310,080	$341,088	$757,916	$416,828	122%
Debt Service - Parcel B Timeshare	$0	$174,610	$174,610	$174,610	$0	0%
Operations/Maintenance - Parcel B	$0	$45,404	$49,944	$110,979	$61,035	122%
Total	$0	$220,014	$224,555	$285,589	$61,035	27%
Debt Service - Parcel B Hotel	$387,999	$218,479	$218,479	$218,479	$0	0%
Operations/Maintenance - Parcel B	$102,215	$56,811	$62,492	$138,861	$76,369	122%
Total	$490,214	$275,290	$280,971	$357,340	$76,369	27%
Debt Service - Parcel C/D	$678,998	$687,906	$687,906	$687,906	$0	0%
Operations/Maintenance - Parcel C/D	$178,887	$178,887	$196,775	$437,246	$240,470	122%
Total	$857,885	$866,793	$884,682	$1,125,152	$240,470	27%
Debt Service - Parcel E	$563,189	$570,578	$570,578	$570,578	$0	0%
Operations/Maintenance - Parcel E	$148,371	$148,371	$163,208	$362,657	$199,449	122%
Total	$711,560	$718,949	$733,786	$933,235	$199,449	27%
Debt Service - Parcel F	$290,999	$294,817	$294,817	$294,817	$0	0%
Operations/Maintenance - Parcel F	$76,663	$76,663	$84,330	$187,385	$103,055	122%
Total	$367,662	$371,480	$379,147	$482,202	$103,055	27%
Debt Service - Parcel G	$161,947	$164,071	$164,071	$164,071	$0	0%
Operations/Maintenance - Parcel G	$42,660	$42,660	$46,926	$104,273	$57,347	122%
Total	$204,607	$206,732	$210,998	$268,344	$57,347	27%

SECTION B

RESOLUTION 2023-09

A RESOLUTION OF THE BOARD OF SUPERVISORS OF THE BONNET CREEK RESORT COMMUNITY DEVELOPMENT DISTRICT IMPOSING SPECIAL ASSESSMENTS AND CERTIFYING AN ASSESSMENT ROLL; PROVIDING A SEVERABILITY CLAUSE; AND PROVIDING AN EFFECTIVE DATE.

WHEREAS, the Bonnet Creek Resort Community Development District (the "District") is a local unit of special-purpose government established pursuant to Chapter 190, Florida Statutes for the purpose of providing, operating and maintaining infrastructure improvements, facilities and services to the lands within the District; and

WHEREAS, the District is located in Orange County, Florida (the "County"); and

WHEREAS, the District has constructed or acquired various infrastructure improvements and provides certain services in accordance with the District's adopted improvement plan and Chapter 190, *Florida Statutes*; and

WHEREAS, the Board of Supervisors (the "Board") of the District hereby determines to undertake various operations and maintenance activities described in the District's budget for Fiscal Year 2023-2024 (the "Operations and Maintenance Budget"), attached hereto as Exhibit "A" and incorporated by reference herein; and

WHEREAS, the District must obtain sufficient funds to provide for the operation and maintenance of the services and facilities provided by the District as described in the District's budget for Fiscal Year 2023-2024; and

WHEREAS, the provision of such services, facilities, and operations is a benefit to lands within the District; and

WHEREAS, Chapter 190, *Florida Statutes*, provides that the District may impose special assessments on benefitted lands within the District; and

WHEREAS, the District has previously levied an assessment for debt service, which the District desires to collect directly and which is also indicated on Exhibits "A" and "B"; and

WHEREAS, the District has determined that the utilization of the Uniform Method for the collection of assessments is either unavailable or not in the District's best interest; and

WHEREAS, it is in the best interests of the District to proceed with the imposition of the special assessments for operations and maintenance in the amounts set forth in Exhibits "A" and "B"; and

WHEREAS, the District desires to levy and directly collect on the lands within the District special assessments reflecting their portion of the District's operations and maintenance budget; and

WHEREAS, it is in the best interests of the District to adopt the Assessment Roll of the Bonnet Creek Resort Community Development District (the "Assessment Roll") attached to this Resolution as Exhibit "B" and incorporated as a material part of this Resolution by this reference, and to certify the Assessment Roll; and

WHEREAS, it is in the best interests of the District to permit the District Manager to amend the Assessment Roll certified by this Resolution as the Property Appraiser updates the property roll for the County, for such time as authorized by Florida law.

NOW, THEREFORE, BE IT RESOLVED BY THE BOARD OF SUPERVISORS OF THE BONNET CREEK RESORT COMMUNITY DEVELOPMENT DISTRICT:

SECTION 1. BENEFIT. The provision of the services, facilities, and operations as described in Exhibit "A" confer a special and peculiar benefit to the lands within the District, which benefits exceed or equal the costs of the assessments. The allocation of the costs to the specially benefitted lands is shown in Exhibits "A" and "B".

SECTION 2. ASSESSMENT IMPOSITION. A special assessment for operation and maintenance as provided for in Chapter 190, *Florida Statutes*, is hereby imposed and levied on benefitted lands within the District in accordance with Exhibits "A" and "B". The lien of the special assessments for operations and maintenance imposed and levied by this Resolution shall be effective upon passage of this Resolution. The lien of the previously levied debt service assessments is reaffirmed by the passage of this Resolution.

SECTION 3. COLLECTION AND ENFORCEMENT; PENALTIES; INTEREST.

A. The previously levied debt service assessments, as well as the operation and maintenance special assessments levied by this Resolution, will be collected directly by the District in accordance with Florida law and with Exhibits "A" and "B".

B. Assessments directly collected by the District are due according to the following schedules:

i). A debt service payment equivalent to the amount due to the bond trustee for each bond payment will be due and payable no later than 30 days prior to each bond payment date; i.e., 50% of the annual accrued interest on the outstanding principal of the bonds (less any credits for interest earned) is due no later than October 1, 2023, and the remaining 50% of the of the annual accrued interest on the outstanding principal of the bonds (less any

credits for interest earned), together with 100% of the annual principal payment, is due no later than April 1, 2024; and

ii). 25% of the total operations and maintenance assessment is due no later than October 1, 2023, 25% is due no later than February 1, 2024, 25% is due no later than April 1, 2024, and the final 25% is due no later than August 1, 2024.

C. In the event that an assessment payment of any type is not made in accordance with the schedules stated above, such assessment payment and any and all future scheduled assessment payments (to include any remaining scheduled debt service assessments for future fiscal years) shall be delinquent, shall be accelerated, and shall accrue penalties and interest in the amount of one percent (1%) per month plus all costs of collection and enforcement, and may either be enforced pursuant to a foreclosure action or, at the District's discretion, collected pursuant to the "Uniform Method" on a future tax bill (or pursuant to any other method or remedy legally available to the District), which amount may include penalties, interest, and costs of collection and enforcement. In the event an assessment subject to direct collection by the District shall be delinquent, the District Manager and District Counsel, without further authorization by the District's Board, may initiate foreclosure proceedings to collect and enforce the delinquent and remaining assessments. Nothing contained herein shall preclude the District from utilizing any legally available method under Florida Law, including the Uniform Method, to collect assessments at any time it sees fit during any fiscal year.

SECTION 4. ASSESSMENT ROLL. The District's Assessment Roll, attached to this Resolution as Exhibit "B", is hereby certified.

SECTION 5. ASSESSMENT ROLL AMENDMENT. The District Manager shall keep apprised of all updates made to the County property roll by the Property Appraiser after the date of this Resolution, and shall amend the District's Assessment Roll in accordance with any such updates, for such time as authorized by Florida law, to the County property roll. After any amendment of the Assessment Roll, the District Manager shall file the updates to the tax roll in the District records.

SECTION 6. SUPPLEMENTATION OF PREVIOUS DISTRICT RESOLUTION(S). Previous District resolutions which, among other things, levied bond debt service assessments on real property within the District, are hereby supplemented by this Resolution with regard to District collection procedures for such debt service assessments. It is the intent of the District to utilize the collection methods and procedures set forth in Section 3 herein for the collection of both operation and maintenance assessments and debt service assessments.

SECTION 7. SEVERABILITY. The invalidity or unenforceability of any one or more provisions of this Resolution shall not affect the validity or enforceability of the remaining portions of this Resolution, or any part thereof.

SECTION 8. EFFECTIVE DATE. This Resolution shall take effect upon the passage and adoption of this Resolution by the Board of Supervisors of the Bonnet Creek Community Development District.

PASSED AND ADOPTED this 7th day of September, 2023.

ATTEST:

By: _____
Secretary / Assistant Secretary

BONNET CREEK RESORT COMMUNITY DEVELOPMENT DISTRICT

By: _____

Its: _____

EXHIBIT "A"

Bonnet Creek Resort

Community Development District

Proposed Budget

FY 2024

Table of Contents

Bonnet Creek Resort

Community Development District

Proposed Budget

General Fund

	Adopted Budget FY2023	Actuals Thru 7/31/23	Projected Next 2 Months	Projected Thru 9/30/23	Proposed Budget FY2024
Revenues					
Maintenance Assessments - Off Roll	$ 944,764	$ 745,278	$ 199,485	$ 944,764	$ 2,099,316
Interest Income	$ 100	$ 731	$ 160	$ 891	$ 1,000
Reuse Water Fees - Wyndham	$ 10,000	$ 11,500	$ 2,000	$ 13,500	$ 13,000
Reuse Water Fees - Golf Course	$ 27,000	$ 22,186	$ 4,500	$ 26,686	$ 27,000
Reuse Water Fees - Signia by Hilton & Waldorf Astoria	$ 4,000	$ 3,519	$ 900	$ 4,419	$ 5,000
Reuse Water Fees - Marriott	$ 2,000	$ 3,355	$ 700	$ 4,055	$ 4,500
Carry Forward Surplus	$ -	$ 16,671	$ -	$ 16,671	$ -
Total Revenues	**$ 987,864**	**$ 803,241**	**$ 207,745**	**$ 1,010,986**	**$ 2,149,816**
Expenditures					
General & Administrative					
Supervisor Fees	$ 8,000	$ 4,200	$ 1,600	$ 5,800	$ 8,000
Engineering Fees	$ 20,000	$ 25,982	$ 4,000	$ 29,982	$ 20,000
Trustee Fees	$ 6,000	$ 5,388	$ -	$ 5,388	$ 6,000
Legal Services	$ 20,000	$ 9,659	$ 3,000	$ 12,659	$ 20,000
Assessment Roll Services	$ 3,000	$ 3,000	$ -	$ 3,000	$ 3,180
Auditing Services	$ 3,225	$ 3,225	$ -	$ 3,225	$ 3,225
Arbitrage Rebate Calculation	$ 450	$ 450	$ -	$ 450	$ 450
District Management Fees	$ 35,596	$ 29,663	$ 5,933	$ 35,596	$ 37,732
Information Technology	$ 1,250	$ 1,042	$ 208	$ 1,250	$ 1,350
Website Maintenance	$ 813	$ 678	$ 135	$ 813	$ 900
Insurance - Professional Liability	$ 8,562	$ 7,670	$ -	$ 7,670	$ 8,562
Telephone	$ 100	$ -	$ -	$ -	$ 100
Legal Advertising	$ 2,100	$ 782	$ 1,500	$ 2,282	$ 2,100
Postage	$ 1,900	$ 224	$ 40	$ 264	$ 1,900
Printing & Binding	$ 1,200	$ 27	$ 10	$ 37	$ 1,200
Office Supplies	$ 300	$ 4	$ 2	$ 6	$ 300
Dues, Licenses & Subscriptions	$ 175	$ 175	$ -	$ 175	$ 175
Contingency	$ 2,000	$ 131	$ 500	$ 631	$ 2,000
Total Administrative:	**$ 114,671**	**$ 92,298**	**$ 16,928**	**$ 109,227**	**$ 117,174**

Bonnet Creek Resort

Community Development District

Proposed Budget

General Fund

	Adopted Budget FY2023	Actuals Thru 7/31/23	Projected Next 2 Months	Projected Thru 9/30/23	Proposed Budget FY2024
Operations & Maintenance					
Field Management	$ 56,976	$ 47,480	$ 9,496	$ 56,976	$ 56,976
Utility Services					
Utility Services	$ 14,000	$ 10,646	$ 2,400	$ 13,046	$ 14,000
Street Lights - Usage	$ 4,200	$ 3,487	$ 1,290	$ 4,777	$ 5,400
Street Lights - Lease & Maintenance Agreement	$ 66,000	$ 35,333	$ 12,000	$ 47,333	$ 66,000
Water Service - Reuse Water	$ 43,000	$ 35,402	$ 8,000	$ 43,402	$ 43,000
SFWMD Water Use Compliance Report	$ 5,000	$ -	$ -	$ -	$ 5,000
Stormwater Control - Bonnet Creek Resort					
Oc/Dep Quarterly Well Monitoring Report	$ 1,500	$ 1,092	$ 364	$ 1,456	$ 1,500
Wetland & Upland Monitoring Services - (Bda)	$ 3,000	$ 721	$ 1,500	$ 2,221	$ 5,000
Pond & Embankment Aquatic Treatment - (Awc)	$ 15,396	$ 10,164	$ 5,082	$ 15,246	$ 15,858
Irrigation Pond Treatment - Solitude	$ 2,926	$ 2,341	$ 468	$ 2,809	$ 2,892
Nuisance/Exotic Species Maintenance - (Awc)	$ 11,000	$ -	$ 4,000	$ 4,000	$ 11,000
Stormwater Control - Crosby Island Marsh					
Nuisance/Exotic Species Maintenance - (Awc)	$ 7,500	$ 2,500	$ 2,500	$ 5,000	$ 7,725
Nuisance/Exotic Species Maintenance - (Bda)	$ 4,500	$ 2,492	$ 1,000	$ 3,492	$ 4,500
Embankment Mowing - (A. E. Smith)	$ 6,000	$ 850	$ 5,150	$ 6,000	$ 6,000
Other Physical Environment					
Property Insurance	$ 12,500	$ 13,268	$ -	$ 13,268	$ 19,902
Entry, Fence, Walls & Gates Maintenance	$ 24,500	$ -	$ 5,000	$ 5,000	$ 24,500
Pump Station Maintenance	$ 4,000	$ 2,919	$ 1,945	$ 4,864	$ 4,000
Pump Station Repairs	$ 7,500	$ 527	$ 2,500	$ 3,027	$ 7,500
Landscape & Irrigation Maintenance	$ 198,000	$ 165,000	$ 33,000	$ 198,000	$ 207,900
Irrigation Repairs	$ 3,500	$ 1,864	$ 1,500	$ 3,364	$ 3,500
Landscape Replacement	$ 15,000	$ 16,686	$ 2,500	$ 19,186	$ 15,000
Lift Station Maintenance	$ 5,000	$ 5,915	$ 315	$ 6,230	$ 5,000
Road & Street Facilities					
Roadway Repair & Maintenance	$ 10,400	$ 2,910	$ 5,000	$ 7,910	$ 10,400
Highway Directional Signage - (R&M)	$ 5,000	$ -	$ 1,000	$ 1,000	$ 5,000
Roadway Directory Signage - (R&M)	$ 5,000	$ -	$ 5,000	$ 5,000	$ 5,000
Sidewalk/Curb Cleaning	$ 12,000	$ 646	$ 12,000	$ 12,646	$ 12,000
Contingency	$ 16,000	$ 20,556	$ 5,000	$ 25,556	$ 16,000
Total Operations & Maintenance:	**$ 559,398**	**$ 382,799**	**$ 128,010**	**$ 510,809**	**$ 580,553**
Total Expenditures	**$ 674,069**	**$ 475,097**	**$ 144,938**	**$ 620,036**	**$ 697,727**
Other Financing Uses					
Transfer Out - Capital Reserve	$ 313,795	$ -	$ 390,950	$ 390,950	$ 1,452,089
Total Other Financing Sources (Uses)	**$ 313,795**	**$ -**	**$ 390,950**	**$ 390,950**	**$ 1,452,089**
Total Expenditures & Other Financing Uses	**$ 987,864**	**$ 475,097**	**$ 535,889**	**$ 1,010,986**	**$ 2,149,816**
Net Change in Fund Balance	$ -	$ 328,144	$ (328,144)	$ 0	$ -

Bonnet Creek Resort
Community Development District

General Fund Budget
FISCAL YEAR 2024

REVENUES:

Maintenance Assessments – Off Roll
The District levies Non-Ad Valorem Assessments on all of the assessable property within the District to pay for operating expenditures incurred during the fiscal year. It will be directly billed from the District to the appropriate property owner.

Interest Income
The District will invest surplus funds with State Board of Administration, Regions Bank, and Truist Bank.

Reuse Water Fees
The District pays Orange County Utilities Department for monthly reclaimed commercial water usage then bills Wyndham, Golf Course, Signia by Hilton, the Waldorf Astoria, and Marriott for their portion based on individual meter readings to reimburse the cost of the reuse water.

EXPENDITURES:

GENERAL & ADMINISTRATIVE

Supervisor Fees
The District may compensate its supervisors within the appropriate statutory limits of $200 maximum per meeting within an annual cap of $4,800 per supervisor. The amount is based upon 5 Supervisors attending 8 monthly meetings during the fiscal year.

Engineering Fees
The District's engineer, Donald W. McIntosh, provides general engineering services to the District. Among these services are attendance at and preparation for monthly board meetings, review of construction invoices and all other engineering services requested by the district throughout the year.

Trustee Fees
The District issued Series 2016 Special Assessment Refunding Bonds that are deposited with a Trustee at US Bank, N.A.

Legal Services
The District's legal counsel, Latham, Luna, Eden & Beaudine LLP, provides general legal services to the District. Among these services are attendance at and preparation for monthly board meetings, review of operating and maintenance contracts and all other legal services requested by the district throughout the year.

Bonnet Creek Resort
Community Development District

General Fund Budget
FISCAL YEAR 2024

Assessment Roll Services
The District has contracted with Governmental Management Services - Central Florida, LLC for the collection of prepaid assessments, maintaining Lien Book, updating the District's Tax Roll and levying the annual assessment.

Auditing Services
The District is required annually to conduct an audit of its financial records by an Independent Certified Public Accounting firm once it reaches certain revenue and expenditure levels, or has issued bonds and incurred debt. The District is contracted with Berger, Toombs, Elam, Gaines & Frank

Arbitrage Rebate Calculation
The District is required to calculate the interest earned from bond proceeds each year pursuant to the Internal Revenue Code of 1986. The Rebate Analyst is required to verify that the District has not received earnings higher than the yield of the bonds. The District is contracted with AMTEC.

District Management Fees
The District has contracted with Governmental Management Services – Central Florida, LLC to provide Management, Accounting and Recording Secretary Services for the District. The services include, but are not limited to, recording and transcription of board meetings, administrative services, budget preparation, all financials reporting, annual audits, etc.

Information Technology
Represents various cost of information technology with Governmental Management Services – Central Florida, LLC for the District such as video conferencing, cloud storage and servers, positive pay implementation and programming for fraud protection, accounting software, tablets for meetings, Adobe, Microsoft Office, etc.

Website Maintenance
Represents the costs with Governmental Management Services – Central Florida, LLC associated with monitoring and maintaining the District's website created in accordance with Chapter 189, Florida Statutes. These services include site performance assessments, security and firewall maintenance, updates, document uploads, hosting and domain renewals, website backups, etc.

Insurance – Professional Liability
The District's general liability and public officials liability coverage are provided by Florida Insurance Alliance (FIA). FIA specializes in providing insurance coverage to governmental agencies.

Telephone
Telephone and fax machine.

Legal Advertising
The District will incur expenditures related to legal advertising. The items for which the District will advertise include, but are not limited to meeting schedules, special meeting notices, and public hearings, bidding etc. for the District based on statutory guidelines.

Postage
Mailing of Board Meeting Agenda's, checks for vendors, and any other required correspondence.

Printing & Binding
Printing and binding agenda packages for board meetings, printing of computerized checks, correspondence, stationary, etc.

Office Supplies
Any supplies that may need to be purchased during the Fiscal Year, e.g., paper, minute books, file folders, labels, paper clips, etc.

Dues, Licenses & Subscriptions
The District is required to pay an annual fee of $175 to the Department of Economic Opportunity. This is the only expenditure for this line item.

Contingency
Accounts for any fees or expenditures relating to the district that do not fall under the other budgeted administrative expenditures including bank fees.

OPERATIONS & MAINTENANCE

Field Management
The District has contracted with Governmental Management Services - Central Florida for general maintenance services.

Description	Monthly	Annually
Field Management	$4,748	$56,976
TOTAL		**$56,976**

Bonnet Creek Resort
Community Development District

General Fund Budget
FISCAL YEAR 2024

Utility Services

Utility Services

The District will incur electric utility expenditures for general purposes such as irrigation timers, lift station pumps, fountains, etc. The District maintains the following accounts with Duke Energy.

Description	Monthly	Annually
13251 Chelonia Parkway Ct Sign 1	$30	$360
13251 Chelonia Parkway Ct Sign 2	$30	$360
13251 Chelonia Parkway Ct Sign 3	$30	$360
13251 Chelonia Parkway Ct Sign 4	$30	$360
13251 Chelonia Parkway Ct Entrance Sign	$92	$1,100
13252 Chelonia Parkway Ct Sign 5	$30	$360
14064 Chelonia Parkway Ct Pump	$25	$300
14901 Chelonia Parkway Lift	$200	$2,400
14312 Chelonia Parkway	$700	$8,400
TOTAL		**$14,000**

Street Lights - Usage

The District may have expenditures relating to streetlights throughout the community. These may be restricted to main arterial roads or in some cases to all streetlights within the District's boundaries. The District maintains the following account with Duke Energy.

Description	Monthly	Annually
000 Chelonia Parkway Ct Lite	$450	$5,400
TOTAL		**$5,400**

Street Lights – Lease & Maintenance Agreement

The District may budget for its streetlights lease separately. The District maintains the following account with Duke Energy.

Description	Monthly	Annually
000 Chelonia Parkway Ct Lite	$5,500	$66,000
TOTAL		**$66,000**

Water Service – Reuse Water
The District may incur expenditures related to the use of reclaimed water for irrigation. The District maintains the following account with Orange County Utilities.

Description	Monthly	Annually
14064 Chelonia Parkway	$3,583	$43,000
TOTAL		**$43,000**

SFWMD Water Use Compliance Report
Expenditures related for compliance reporting for the application of Consumptive Water Use Permits with South Florida Water Management District.

Stormwater Control – Bonnet Creek Resort

OC/Dep Quarterly Well Monitoring Report
The District expenditures related to quarterly well monitoring report.

Wetland & Upland Monitoring Services - (BDA)
Include reviews of nuisance/exotic (N/E) plant species maintenance associated with the on-site wetland and upland preservation areas.

Description	Annually
BDA Environmental Consultants	$5,000
TOTAL	**$5,000**

Pond & Embankment Aquatic Treatment – (AWC)
1) Provide chemical/manual treatments 9 times per year to control undesirable aquatic plants and algae growing in pond 2. Control nuisance and exotic species growing along 6811 If of fence line. Control nuisance and exotic species growing along 33418 If of slopes and wetland edges to 15' in. Control of all vegetation growing within 5' of outfall structures.

2) Selective spot spraying techniques will be utilized to avoid impacting native vegetation.

3) Provide chemical treatment with aquatic approved herbicides supervised by state licensed natural area applicators.

Irrigation Pond Treatment – (Solitude)
The District has contract with Solitude Lake Management to provide pond maintenance services on one irrigation pond. Services include aquatic weed control, shoreline weed control and water quality monitoring.

Description	Monthly	Annually
Solitude Lake Management	$241	$2,892
TOTAL		**$2,892**

Nuisance/Exotic Species Maintenance – (AWC)
Includes supervisory oversight of the nuisance/exotic *(N/E)* plant species management (to include the hand-removal and or herbicide treatment of *N/E* plant species) and maintenance if necessary.

Description	Quarterly	Annually
Aquatic Weed Control (Wetlands)	$2,750	$11,000
TOTAL		**$11,000**

Stormwater Control – Crosby Island Marsh

Nuisance/Exotic Species Maintenance – (AWC)
1) Provide chemical/manual treatments to control nuisance and exotic species within Crosby Island Mitigation Site 3 times per ear. Treatments to be completed with a combination of airboat in the wet season and field crews during the dry season.

2) Selective spot spraying techniques will be utilized to avoid impacting native vegetation.

3) Provide chemical treatment with aquatic approved herbicides supervised by state licensed natural area applicators.

Description	Per Visit	Annually
Aquatic Weed Control (Wetlands) – 3 Visits	$2,575	$7,725
TOTAL		**$7,725**

Nuisance/Exotic Species Maintenance – (BDA)
Includes supervisory oversight of the nuisance/exotic *(N/E)* plant species management (to include the hand-removal and or herbicide treatment of *N/E* plant species) and maintenance.

Description	Annually
BDA Environmental Consultants	$4,500
TOTAL	**$4,500**

Embankment Mowing
Mowing of conservation berms surrounding wetland and mitigation areas.

Other Physical Environment

Property Insurance
Represents the District's share of the annual coverage of property insurance. Coverage is provided by Florida Insurance Alliance. FIA specializes in providing insurance coverage to governmental agencies.

Entry, Fence, Walls & Gates Maintenance
The District will incur expenditures to maintain the entry monuments and the fencing.

Pump Station Maintenance
Expenditures incurred for Pump station maintenance.

Pump Station Repairs
Expenditures incurred for Pump station repairs.

Landscape & Irrigation Maintenance
The District contracted with Yellowstone Landscape to maintain the rights-of-way, median strips, recreational facilities including pond banks, entryways, and similar planting areas within the District. These services include but are not limited to monthly landscape maintenance, fertilizer, pesticides, annuals, mulch, and irrigation Maintenance.

Description	Monthly	Annually
Yellowstone - Landscape Maintenance	$17,325	$207,900
TOTAL		**$207,900**

Irrigation Repairs
Expenditures incurred for irrigation repairs.

Landscape Replacement
Expenditures related to replacement of turf, trees, shrubs etc.

Lift Station Maintenance
Expenditures incurred for yearly preventative maintenance and any additional repairs to the lift station and generator.

Description	Quarterly	Annually
Lift Station Preventative Maintenance	$300	$1,200
Generator Preventative Maintenance		$1,250
Contingency		$2,550
TOTAL		**$5,000**

Road & Street Facilities

Roadway Repair and Maintenance
Expenditures related to the repair and maintenance of roadways owned by the District if any.

Highway Directional Signage – (R&M)
Highway Directional Signage expenditures which may not fit into any defined category in this section of the budget.

Roadway Directional Signage – (R&M)
Roadway Directional Signage expenditures which may not fit into any defined category in this section of the budget.

Sidewalk/Curb Cleaning
Estimated cost for pressure washing the District owned sidewalks throughout the community.

Contingency
Monies collected and allocated for expenditures that the District could incur miscellaneous throughout the year, which may not fit into any standard categories.

Transfer Out - Capital Reserve
Monies collected and allocated for the future repair and replacement of various capital improvements.

Bonnet Creek Resort

Community Development District

Proposed Budget

Debt Service Fund Series 2016

Description	Adopted Budget FY2023	Actuals Thru 7/31/23	Projected Next 2 Months	Projected Thru 9/30/23	Proposed Budget FY2024
Revenues					
Assessments - Direct Billed	$ 2,110,462	$ 2,101,025	$ -	$ 2,101,025	$ 2,110,462
Interest Income	$ -	$ 39,925	$ 6,000	$ 45,925	$ -
Carry Forward Surplus	$ 12,778	$ 15,543	$ -	$ 15,543	$ 61,468
Total Revenues	**$ 2,123,240**	**$ 2,156,493**	**$ 6,000**	**$ 2,162,493**	**$ 2,171,929**
Expenditures					
General & Administrative:					
Interest - 11/1	$ 433,013	$ 433,013	$ -	$ 433,013	$ 405,225
Principal - 5/1	$ 1,235,000	$ 1,235,000	$ -	$ 1,235,000	$ 1,295,000
Interest - 5/1	$ 433,013	$ 433,013	$ -	$ 433,013	$ 405,225
Total Expenditures	**$ 2,101,025**	**$ 2,101,025**	**$ -**	**$ 2,101,025**	**$ 2,105,450**
Net Change in Fund Balance	$ 22,215	$ 55,468	$ 6,000	$ 61,468	$ 66,479

Bonnet Creek

Community Development District

Series 2016 Special Assessment Bonds

Amortization Schedule

Date	Balance	Principal	Interest	Total
11/01/23	$ 18,010,000.00	$ -	$ 405,225.00	$ 2,105,450.00
05/01/24	$ 18,010,000.00	$ 1,295,000.00	$ 405,225.00	
11/01/24	$ 16,715,000.00	$ -	$ 376,087.50	$ 2,107,175.00
05/01/25	$ 16,715,000.00	$ 1,355,000.00	$ 376,087.50	
11/01/25	$ 15,360,000.00	$ -	$ 345,600.00	$ 2,106,200.00
05/01/26	$ 15,360,000.00	$ 1,415,000.00	$ 345,600.00	
11/01/26	$ 13,945,000.00	$ -	$ 313,762.50	$ 2,107,525.00
05/01/27	$ 13,945,000.00	$ 1,480,000.00	$ 313,762.50	
11/01/27	$ 12,465,000.00	$ -	$ 280,462.50	$ 2,110,925.00
05/01/28	$ 12,465,000.00	$ 1,550,000.00	$ 280,462.50	
11/01/28	$ 10,915,000.00	$ -	$ 245,587.50	$ 2,111,175.00
05/01/29	$ 10,915,000.00	$ 1,620,000.00	$ 245,587.50	
11/01/29	$ 9,295,000.00	$ -	$ 209,137.50	$ 2,113,275.00
05/01/30	$ 9,295,000.00	$ 1,695,000.00	$ 209,137.50	
11/01/30	$ 7,600,000.00	$ -	$ 171,000.00	$ 2,117,000.00
05/01/31	$ 7,600,000.00	$ 1,775,000.00	$ 171,000.00	
11/01/31	$ 5,825,000.00	$ -	$ 131,062.50	$ 2,117,125.00
05/01/32	$ 5,825,000.00	$ 1,855,000.00	$ 131,062.50	
11/01/32	$ 3,970,000.00	$ -	$ 89,325.00	$ 2,118,650.00
05/01/33	$ 3,970,000.00	$ 1,940,000.00	$ 89,325.00	
11/01/33	$ 2,030,000.00	$ -	$ 45,675.00	$ 2,121,350.00
05/01/34	$ 2,030,000.00	$ 2,030,000.00	$ 45,675.00	
		$ 18,010,000.00	**$ 5,225,850.00**	**$ 23,235,850.00**

Bonnet Creek Resort

Community Development District

Proposed Budget

Capital Projects Fund

Description	Adopted Budget FY2023	Actuals Thru 7/31/23	Projected Next 2 Months	Projected Thru 9/30/23	Proposed Budget FY2024
Revenues					
Transfer In - Capital Projects	$ 313,795	$ -	$ 390,950	$ 390,950	$ 1,452,089
Interest Income	$ 50	$ 10,837	$ -	$ 10,837	$ 50
Carry Forward Surplus	$ 526,392	$ 578,452	$ -	$ 578,452	$ 672,861
Total Revenues	**$ 840,237**	**$ 589,290**	**$ 390,950**	**$ 980,240**	**$ 2,125,000**
Expenditures					
General & Administrative:					
Chelonia Parkway Paving	$ -	$ -	$ -	$ -	$ 1,800,000
Offsite Wayfinding Signs	$ -	$ -	$ -	$ -	$ 125,000
Irrigation Improvement	$ -	$ -	$ 26,864	$ 26,864	$ -
Entry Monument	$ -	$ 70,475	$ 210,000	$ 280,475	$ -
Crosby Island Berm Repair	$ -	$ -	$ -	$ -	$ 150,000
Contingency	$ 840,237	$ 40	$ -	$ 40	$ 50,000
Total Expenditures	**$ 840,237**	**$ 70,515**	**$ 236,864**	**$ 307,379**	**$ 2,125,000**
Net Change in Fund Balance	$ -	$ 518,775	$ 154,086	$ 672,861	$ 0

BONNET CREEK RESORT
COMMUNITY DEVELOPMENT DISTRICT

FISCAL YEAR 2023/2024 O&M & DEBT SERVICE ASSESSMENT SCHEDULE

Total O & M Assessment	$2,099,316
Total DS Assessment	$2,110,462

PRODUCT TYPE (PARCEL)	ALLOCATION OF ASSESSMENTS	TOTAL OPERATIONS AND MAINTENANCE ASSESSMENT	ALLOCATION OF DEBT ASSESSMENTS	TOTAL SERIES 2016 DEBT SERVICE ASSESSMENT	TOTAL FY 2023/2024 ASSESSMENT PER PARCEL
Timeshare (A)	36.10%	$757,916.20	0.00%	$0.00	$757,916.20
Timeshare (B)	5.29%	$110,978.78	8.27%	$174,610.27	$285,589.05
Hotel (B)	6.61%	$138,860.88	10.35%	$218,479.04	$357,339.92
Hotel (C/D)	20.83%	$437,245.62	32.60%	$687,906.28	$1,125,151.90
Timeshare (E)	17.28%	$362,656.91	27.04%	$570,577.65	$933,234.56
Hotel (F)	8.93%	$187,384.98	13.97%	$294,816.96	$482,201.94
Golf Course (G)	4.97%	$104,273.05	7.77%	$164,071.33	$268,344.38
	100.00%	$2,099,316.42	100.00%	$2,110,461.53	$4,209,777.95

FISCAL YEAR 2022/2023 O&M & DEBT SERVICE ASSESSMENT SCHEDULE

Timeshare (A)	36.10%	$341,088.07	0.00%	$0.00	$341,088.07
Timeshare (B)	5.29%	$49,944.23	8.27%	$174,610.27	$224,554.50
Hotel (B)	6.61%	$62,492.12	10.35%	$218,479.04	$280,971.16
Hotel (C/D)	20.83%	$196,775.40	32.60%	$687,906.28	$884,681.68
Timeshare (E)	17.28%	$163,207.95	27.04%	$570,577.65	$733,785.60
Hotel (F)	8.93%	$84,329.62	13.97%	$294,816.96	$379,146.58
Golf Course (G)	4.97%	$46,926.42	7.77%	$164,071.33	$210,997.75
	100.00%	$944,763.81	100.00%	$2,110,461.53	$3,055,225.34

FISCAL YEAR 2023/2024 O&M & DEBT SERVICE ASSESSMENT INCREASE

Timeshare (A)	36.10%	$416,828.13	0.00%	$0.00	$416,828.13
Timeshare (B)	5.29%	$61,034.55	8.27%	$0.00	$61,034.55
Hotel (B)	6.61%	$76,368.76	10.35%	$0.00	$76,368.76
Hotel (C/D)	20.83%	$240,470.22	32.60%	$0.00	$240,470.22
Timeshare (E)	17.28%	$199,448.96	27.04%	$0.00	$199,448.96
Hotel (F)	8.93%	$103,055.36	13.97%	$0.00	$103,055.36
Golf Course (G)	4.97%	$57,346.63	7.77%	$0.00	$57,346.63
	100.00%	$1,154,552.61	100.00%	$0.00	$1,154,552.61

BONNET CREEK RESORT
COMMUNITY DEVELOPMENT DISTRICT

FISCAL YEAR 2023/2024 O & M & DEBT SERVICE SCHEDULE

2022/2023 O & M Budget	$944,764
2023/2024 O & M Budget	$2,099,316
Total Difference	$1,154,553

2022/2023 Debt Service Assessment	$2,110,462
2023/2024 Debt Service Assessment	$2,110,462
Total Difference	$0

PER UNIT ANNUAL ASSESSMENT

	2020/2021	2021/2022	2022/2023	2023/2024	Proposed Increase/Decrease	
Debt Service - Parcel A	$0	$0	$0	$0	$0	0%
Operations/Maintenance - Parcel A	$310,080	$310,080	$341,088	$757,916	$416,828	122%
Total	$310,080	$310,080	$341,088	$757,916	$416,828	122%
Debt Service - Parcel B Timeshare	$0	$174,610	$174,610	$174,610	$0	0%
Operations/Maintenance - Parcel B	$0	$45,404	$49,944	$110,979	$61,035	122%
Total	$0	$220,014	$224,555	$285,589	$61,035	27%
Debt Service - Parcel B Hotel	$387,999	$218,479	$218,479	$218,479	$0	0%
Operations/Maintenance - Parcel B	$102,215	$56,811	$62,492	$138,861	$76,369	122%
Total	$490,214	$275,290	$280,971	$357,340	$76,369	27%
Debt Service - Parcel C/D	$678,998	$687,906	$687,906	$687,906	$0	0%
Operations/Maintenance - Parcel C/D	$178,887	$178,887	$196,775	$437,246	$240,470	122%
Total	$857,885	$866,793	$884,682	$1,125,152	$240,470	27%
Debt Service - Parcel E	$563,189	$570,578	$570,578	$570,578	$0	0%
Operations/Maintenance - Parcel E	$148,371	$148,371	$163,208	$362,657	$199,449	122%
Total	$711,560	$718,949	$733,786	$933,235	$199,449	27%
Debt Service - Parcel F	$290,999	$294,817	$294,817	$294,817	$0	0%
Operations/Maintenance - Parcel F	$76,663	$76,663	$84,330	$187,385	$103,055	122%
Total	$367,662	$371,480	$379,147	$482,202	$103,055	27%
Debt Service - Parcel G	$161,947	$164,071	$164,071	$164,071	$0	0%
Operations/Maintenance - Parcel G	$42,660	$42,660	$46,926	$104,273	$57,347	122%
Total	$204,607	$206,732	$210,998	$268,344	$57,347	27%

EXHIBIT "B"

SECTION 6

SECTION B

SECTION I

This item will be provided under separate cover

SECTION C

SECTION I

Bonnet Creek Resort
Community Development District

219 E. Livingston Street, Orlando, FL 32801
Phone: 407-841-5524 – Fax: 407-839-1526

Operation and Maintenance Expenditures
For Board Approval
July 31, 2023

Attached please find the check register listing the Operation and Maintenance expenditures paid from July 1, 2023 through July 31, 2023. This does not include expenditures previously approved by the Board.

The total items being presented: $ **78,697.32**

Approval of Expenditures:

_____

_____ Chairman

_____Vice Chairman

_____ Assistant Secretary

Bonnet Creek Resort Community Development District

Paid Operation & Maintenance Expenditures

July 1, 2023 Through July 31, 2023

Vendor Name	Check Number	Invoice Number	Invoice Description	Amount
ALLEN E. SMITH RANCH & FARMING	4068	5670	BRUSH CUT RETENTION BERM	$ 7,811.00
YELLOWSTONE LANDSCAPE	4069	ON 549625	LANDSCAPE MAINTENANCE JULY 2023	$ 16,500.00
BREEDLOVE DENNIS & ASSOCIATES	4070	53535	NUISANCE/EXOTIC SPECIES CIM	$ 942.00
DONALD W. MCINTOSH ASSOCIATES, INC	4071	44279	GENERAL ENGINEER JUNE 2023	$ 1,790.64
DONALD W. MCINTOSH ASSOCIATES, INC	4071	44358	ENGINEER REPORT	$ 7,548.47
FREDERICK W. SAWYERS	4072	FS07062023	BOS MEETING 7/6/23	$ 200.00
GOVERNMENTAL MANAGEMENT SERVICES	4073	303	MANAGEMENT FEES JULY 2023	$ 3,147.07
GOVERNMENTAL MANAGEMENT SERVICES	4073	304	FIELD MANAGEMENT JULY 2023	$ 4,748.00
HERBERT VON KLUGE	4074	HK07062023	BOS MEETING 7/6/23	$ 200.00
RCM UTILITIES, LLC	4075	8479	QUARTERLY MAINTENANCE INSPECTION	$ 315.00
REBECCA R FRASIER	4076	BF07062023	BOS MEETING 7/6/23	$ 200.00
RICHARD J SCINTA JR	4077	RS07062023	BOS MEETING 7/6/23	$ 200.00
RANDALL GREENE	4078	RG07062023	BOS MEETING 7/6/23	$ 200.00
SOLITUDE LAKE MANAGEMENT LLC	4079	PSI-90571	IRRIGATION POND TREATMENT JULY 2023	$ 234.00
ALLEN E. SMITH RANCH & FARMING	4080	5649	HURRICANE IAN CLEAN UP	$ 11,100.00
ALLEN E. SMITH RANCH & FARMING	4080	5650	MOWING	$ 850.00
ALLEN E. SMITH RANCH & FARMING	4080	5651	INSTALL 7 NEW POSTS	$ 350.00
LATHAM, LUNA, EDEN & BEAUDINE LLP	4081	118376	GENERAL COUNSEL JUNE 2023	$ 2,437.46
YELLOWSTONE LANDSCAPE	4082	ON 560990	LANDSCAPE ENHANCEMENT	$ 13,337.52
DONALD W. MCINTOSH ASSOCIATES, INC.	200	44279	INTERSECTION IMPROVEMENTS	$ 945.00
Subtotal Check Register				$ 73,056.16
Automatic Drafts		**Account Numbers**		
ORANGE COUNTY UTILITIES	Auto-Pay	855665881	UTILITIES	$ 4,319.07
DUKE ENERGY	Auto-Pay	9100 8897 0713	UTILITIES	$ 30.79
DUKE ENERGY	Auto-Pay	9100 8897 0797	UTILITIES	$ 30.79
DUKE ENERGY	Auto-Pay	9100 8897 0987	UTILITIES	$ 84.32
DUKE ENERGY	Auto-Pay	9100 8901 1074	UTILITIES	$ 168.35
DUKE ENERGY	Auto-Pay	9100 8901 1587	UTILITIES	$ 23.25
DUKE ENERGY	Auto-Pay	9100 8901 1660	UTILITIES	$ 30.79
DUKE ENERGY	Auto-Pay	9100 8901 1751	UTILITIES	$ 30.79
DUKE ENERGY	Auto-Pay	9100 8901 1850	UTILITIES	$ 30.79
DUKE ENERGY	Auto-Pay	9101 3139 5246	UTILITIES	$ 892.22
Subtotal Automatic Drafts				$ 5,641.16
Report Total				**$ 78,697.32**

*** CHECK DATES 07/01/2023 - 07/31/2023 ***
BONNET CREEK-GENERAL FUND
BANK A BCRCDD- GENERAL FUND

CHECK DATE	VEND#	.....INVOICE..... DATE	INVOICE	...EXPENSED TO... YRMO	DPT ACCT# SUB SUBCLASS	VENDOR NAME	STATUS	AMOUNT	....CHECK..... AMOUNT	#
7/05/23	00004	6/29/23	5670	202306	320-53800-49000		*	7,811.00		
			BRUSH CUT RETENTION BERM							
						ALLEN E. SMITH RANCH & FARMING			7,811.00	004068
7/05/23	00050	7/01/23	ON 54962	202307	320-53800-47300		*	16,500.00		
			LANDSCAPE MAINT JULY 23							
						YELLOWSTONE LANDSCAPE			16,500.00	004069
7/14/23	00010	6/26/23	53535	202305	320-53800-44120		*	720.90		
			NUIS/EXOTIC SPEC CIM							
		6/26/23	53535	202305	320-53800-44140		*	221.10		
			NUIS/EXOTIC SPEC CIM							
						BREEDLOVE DENNIS & ASSOCIATES			942.00	004070
7/14/23	00016	7/01/23	44279	202306	310-51300-31100		*	1,790.64		
			GENERAL ENGINEER JUNE 23							
		7/01/23	44358	202306	310-51300-31100		*	7,548.47		
			ENGINEER REPORT							
						DONALD W. MCINTOSH ASSOCIATES, INC			9,339.11	004071
7/14/23	00098	7/06/23	FS070620	202307	310-51300-11000		*	200.00		
			BOS MEETING 7/6/23							
						FREDERICK W. SAWYERS			200.00	004072
7/14/23	00001	7/01/23	303	202307	310-51300-34000		*	2,966.33		
			MANAGEMENT FEES JULY 23							
		7/01/23	303	202307	310-51300-35200		*	67.75		
			WEBSITE ADMIN JULY 23							
		7/01/23	303	202307	310-51300-35100		*	104.17		
			INFORMATION TECH JULY 23							
		7/01/23	303	202307	310-51300-51000		*	.42		
			OFFICE SUPPLIES JULY 23							
		7/01/23	303	202307	310-51300-42000		*	8.40		
			POSTAGE JULY 23							
		7/01/23	304	202307	320-53800-34000		*	4,748.00		
			FIELD MANAGEMENT JULY 23							
						GOVERNMENTAL MANAGEMENT SERVICES-			7,895.07	004073
7/14/23	00093	7/06/23	HK070620	202307	310-51300-11000		*	200.00		
			BOS MEETING 7/6/23							
						HERBERT VON KLUGE			200.00	004074
7/14/23	00102	7/07/23	8479	202306	320-53800-46600		*	315.00		
			QRTLY MAINT INSPECTION							
						RCM UTILITIES, LLC			315.00	004075

*** CHECK DATES 07/01/2023 - 07/31/2023 ***
BONNET CREEK-GENERAL FUND
BANK A BCRCDD- GENERAL FUND

CHECK DATE	VEND#	.....INVOICE..... DATE	INVOICE	...EXPENSED TO... YRMO	DPT ACCT# SUB SUBCLASS	VENDOR NAME	STATUS	AMOUNT	....CHECK..... AMOUNT	#
7/14/23	00110	7/06/23	BF070620	202307	310-51300-11000		*	200.00		
			BOS MEETING 7/6/23							
						REBECCA R FRASIER			200.00	004076
7/14/23	00111	7/06/23	RS070620	202307	310-51300-11000		*	200.00		
			BOS MEETING 7/6/23							
						RICHARD J SCINTA JR			200.00	004077
7/14/23	00077	7/06/23	RG070620	202307	310-51300-11000		*	200.00		
			BOS MEETING 7/6/23							
						RANDALL GREENE			200.00	004078
7/14/23	00086	7/01/23	PSI-9057	202307	320-53800-44150		*	234.00		
			RR POND TREATMENT JULY 23							
						SOLITUDE LAKE MANAGEMENT LLC			234.00	004079
7/27/23	00004	5/31/23	5649	202305	320-53800-49000		*	11,100.00		
			HURRICANE IAN CLEAN UP							
		5/31/23	5650	202305	320-53800-44010		*	850.00		
			MOWING							
		5/31/23	5651	202305	320-53800-49000		*	350.00		
			INSTALL 7 NEWW POSTS							
						ALLEN E. SMITH RANCH & FARMING			12,300.00	004080
7/27/23	00028	7/05/23	118376	202306	310-51300-31500		*	2,437.46		
			GENERAL COUNSEL JUNE 23							
						LATHAM, LUNA, EDEN & BEAUDINE LLP			2,437.46	004081
7/27/23	00050	7/19/23	ON 56099	202307	320-53800-47300		*	13,337.52		
			LANDSCAPE ENHANCEMENT							
						YELLOWSTONE LANDSCAPE			13,337.52	004082

TOTAL FOR BANK A 72,111.16

TOTAL FOR REGISTER 72,111.16

*** CHECK DATES 07/01/2023 - 07/31/2023 ***
BONNET CREEK-SERIES 2002 CAP
BANK B BCRCDD-CAP. RESERVE

CHECK DATE	VEND#	.....INVOICE..... DATE	INVOICE	...EXPENSED TO... YRMO	DPT ACCT# SUB	SUBCLASS	VENDOR NAME	STATUS	AMOUNT	....CHECK..... AMOUNT	#
7/14/23	00051	7/01/23	44279	202306	600-53800-60700			*	945.00		
			INTERSECTION IMPROVEMENTS								
							DONALD W. MCINTOSH ASSOCIATES, INC.			945.00	000200

TOTAL FOR BANK B 945.00

TOTAL FOR REGISTER 945.00

1-4
320 538 49

Allen E. Smith Ranch & Farming, Inc.
10524 Moss Park Road, Suite 204-511
Orlando, FL 32832
407-207-6200
office@aesrf.net

INVOICE

BILL TO
Bonnet Creek Resort Community Development District
219 E. Livingston St.
Orlando, Florida 32801

INVOICE	5670
DATE	06/29/2023
TERMS	Net 30
DUE DATE	07/29/2023

PROJECT	LOCATION	WORK DATE(S)
Brush Cut Retention Berm	Crosby Island Marsh	06/22/2023-06/23/2023

ACTIVITY	DESCRIPTION	QTY	RATE	AMOUNT
Miscellaneous Labor	Brush cut with walk behind bush hog and weed eat retention berm to expose wash out points from the entrance to the discussed cut off point @ $7,811.00	1	7,811.00	7,811.00

Thank you for your business!

BALANCE DUE **$7,811.00**

Please make checks payable to: Allen E. Smith Ranch and Farming Inc.

Please direct all billing questions to our office
(407) 207-6200

RECEIVED
JUN 30 2023

1-50 320 538 473

YELLOWSTONE LANDSCAPE

INVOICE

INVOICE #	INVOICE DATE
ON 549625	7/1/2023
TERMS	**PO NUMBER**
Net 30	

Bill To:

Bonnet Creek Resort CDD
c/o Governmental Management Services, LLC
6200 Lee Vista Blvd
Suite 300
Orlando, FL 32822

Remit To:

Yellowstone Landscape
PO Box 101017
Atlanta, GA 30392-1017

Property Name: Bonnet Creek Resort CDD

Invoice Due Date: July 31, 2023
Invoice Amount: $16,500.00

Description	Current Amount
Monthly Maintenance July 2023	$16,500.00

Invoice Total **$16,500.00**

Excellence IN COMMERCIAL LANDSCAPING

RECEIVED
JUN 29 2023

Should you have any questions or inquiries please call (386) 437-6211.

1-10
320 538 44140

BDA
ENVIRONMENTAL CONSULTANTS

Bonnet Creek Resort CDD
Governmental Management Services - Central Florida
C/O George Flint
6200 Lee Vista Boulevard, Suite 300
Orlando, FL 32822

Invoice number 53535
Date 06/26/2023

Project **1995-180 BONNETT CREEK DRI**

For Services Through May 26, 2023
Please include invoice number on remittance

LABOR

	Hours	Rate	Billed Amount
Environmental Specialist IV	3.50	53.00	185.50
Senior Scientist	8.50	89.00	756.50
Labor subtotal	12.00		942.00

Invoice total **942.00**

Aging Summary

Invoice Number	Invoice Date	Outstanding	Current	Over 30	Over 60	Over 90	Over 120
53405	05/24/2023	732.85		732.85			
53535	06/26/2023	942.00	942.00				
	Total	1,674.85	942.00	732.85	0.00	0.00	0.00

Remit To:
BDA, Inc.
330 West Canton Avenue
Winter Park, Florida 32789

FEIN: 59-1694414

RECEIVED
JUN 29 2023

BDA
ENVIRONMENTAL CONSULTANTS

File: 95180
Period: Through May 26, 2023

SENT VIA ELECTRONIC MAIL

Bonnet Creek Resort Community Development District
c/o GMS/George Flint
6200 Lee Vista Boulevard, Suite 300
Orlando, Florida 32822
Phone: 407-841-5524
Email: invoices@gmscfl.com

Project Name: **Bonnet Creek Resort Development of Regional Impact**

PROGRESS REPORT

The following services were provided during the billing period:

Administrative:

1. The services included in this invoice are being performed pursuant to the authorization received from the Bonnet Creek Resort Community Development District pursuant to the following contracts: 2022-2023 Bonnet Creek Resort Project Site Contract Extension for Wetland & Upland Monitoring Services pursuant to an extension authorization dated February 22, 2023; and 2022-2023 Crosby Island Marsh Mitigation Site Contract Extension for Nuisance/Exotic Species Maintenance pursuant to an extension authorization dated February 22, 2023.

2. Assisted with review of the Bonnet Creek Resort sign location as requested.

Technical:

Maintenance Review Services Contract for the Bonnet Creek Resort Project Site (Year 2022-2023)

Task – Maintenance Review Services

1. No activity this billing period.

Task Fee (Year 2022-2023): $2,500.00

P:\ADMIN\PROJECTS\95180\PRGS\2023\052623.DOC

Amount Previously Billed:	$853.10
Amount Due This Invoice:	**$0.00**
Budget Remaining:	$1,646.90

Task – Project Team Meetings and Additional Requested Services

1. Ms. Penny E. Cople (Senior Scientist) discussed the status of berm maintenance with Mr. Herb Von Kluge on May 10, 2023, and requested a site review to discuss future maintenance activities; conducted a site review with Mr. Von Kluge on May 23, 2023, to review the status of berm maintenance activities and discussed action items moving forward; and provided a verbal update on the site review to Mr. Clayton Smith on May 25, 2023.

Task Fee (Year 2021-2022):	T&M
Amount Previously Billed:	$1,387.92
Amount Due This Invoice:	**$720.90**

Management and Maintenance Review Services Contract for the Crosby Island Marsh Mitigation Site (Year 2022-2023)

Task – Reviews of Nuisance/Exotic Species Maintenance

1. Mr. James M. Weber (Environmental Specialist IV) conducted a nuisance/exotic plant species maintenance review on May 18, 2023.

2. Administrative Staff (Environmental Specialist IV) maintained administrative records throughout the billing period.

Task Fee (Year 2022-2023):	$4,500.00
Amount Previously Billed:	$690.05
Amount Due This Invoice:	**$185.50**
Budget Balance:	$3,624.45

Task – Project Team Meetings and Additional Requested Services

1. Ms. Cople (Senior Scientist) corresponded with Mr. C. Smith and Allen Smith Farming & Ranching Services on May 25, 2023, to inquire about the status of scheduling of the prescribed burn.

BDA
ENVIRONMENTAL CONSULTANTS

Bonnet Creek Resort Community Development District
Period: Through May 26, 2023

Task Fee (Year 2022-2023):	T&M
Amount Previously Billed:	$72.90
Amount Due This Invoice:	**$35.60**

Total Amount Due This Invoice: $942.00

PEC/pec/tnp

Donald W McIntosh Associates Inc.
2200 Park Avenue North
Winter Park, FL 32789-2355
(407) 644-4068

1-16
310 513 311

Bonnet Creek Resort CDD
George Flint
6200 Lee Vista Boulevard, Suite 300
Orlando, FL 32822

Invoice number 44279
Date 07/01/2023

Project **22234 Bonnet Creek Resort CDD**
General Consulting

For Period Through June 16, 2023

Invoice Summary

Description	Current Billed
CDD general consulting	945.00
CDD inspections	0.00
CDD miscellaneous meetings	735.00
CDD intersection improvements	945.00
CDD irrigation pump upgrade	0.00
Reimbursable Expenses	110.64
Total	2,735.64

1790.6

Professional Fee Detail

	Hours	Rate	Billed Amount
Associate	12.50	210.00	2,625.00

Reimbursable Expenses

	Units	Rate	Billed Amount
Mileage	112.00	0.655	73.36
Travel			37.28
Reimbursable Expenses subtotal			110.64

Invoice total	**2,735.64**

RECEIVED
JUN 29 2023

Invoice Supporting Detail

22234 Bonnet Creek Resort CDD General Consulting

000 CDD general consulting

Phase Status: Active

Billing Cutoff: 06/16/2023

	Date	Units	Rate	Amount
Labor WIP Status: Billable				
Associate				
James C. Nugent				
Time Per Contract	05/22/2023	0.50	210.00	105.00
Foolwo up with Terracon on berm repair proposal, call GMS about mowing on berm for topo survey				
Time Per Contract	05/24/2023	0.50	210.00	105.00
Review Terracon proposal for CIMMA berm repairs, follow up with PSI on pavement assessment proposal.				
Time Per Contract	05/25/2023	0.50	210.00	105.00
Followup with PSI on pavement assessment proposal,email to GMS when received.				
Time Per Contract	06/02/2023	0.50	210.00	105.00
Coordination with district manage and counsel on PSI and Terracon authorizations.				
Time Per Contract	06/05/2023	0.50	210.00	105.00
Assistance with Hilton bridges indemity agreement (PH&R emails, transmit documents)				
Time Per Contract	06/06/2023	0.75	210.00	157.50
Coordination with PSI on pavement assessment, research past pavement resurfacing, follow up on PSI and Terracon contracts				
Time Per Contract	06/07/2023	0.50	210.00	105.00
Coordination emails with PSI and Terracon on respective contracts for CIMMA and Chelonia pavement				
Time Per Contract	06/08/2023	0.50	210.00	105.00
Coordination with PSI on pavment assessment, research historical traffic report/ESAL estimates				
Time Per Contract	06/16/2023	0.25	210.00	52.50
Coordination calls/emails with GMS and PSI on pavement assessment				
	Subtotal	**4.50**		**945.00**
	Labor total	**4.50**		**945.00**

001 CDD inspections

Phase Status: Active

Billing Cutoff: 06/16/2023

	Date	Units	Rate	Amount
WIP Status:				
	Subtotal			**0.00**
	total			**0.00**

002 CDD miscellaneous meetings

Phase Status: Active

Billing Cutoff: 06/16/2023

	Date	Units	Rate	Amount
Labor WIP Status: Billable				
Associate				
James C. Nugent				
Time Per Contract	06/01/2023	3.50	210.00	735.00
Prep for and attend CDD board meeting				
	Subtotal	**3.50**		**735.00**

Invoice Supporting Detail

22234 Bonnet Creek Resort CDD General Consulting

002 CDD miscellaneous meetings

Phase Status: Active

Billing Cutoff: 06/16/2023

Date	Units	Rate	Amount
Labor total	3.50		735.00

005 CDD intersection improvements

Phase Status: Active

Billing Cutoff: 06/16/2023

Date	Units	Rate	Amount
Labor WIP Status: Billable			
Associate			
James C. Nugent			
Time Per Contract 05/22/2023	0.75	210.00	157.50
Review ACOE permit for entry sign impacts, call Jm W on restart of RCID permitting.			
Time Per Contract 05/23/2023	1.00	210.00	210.00
Follow up with BDA on ACOE report. Research DBS and BCR cost info for wetland impacts and erosion control CO			
Time Per Contract 05/31/2023	0.25	210.00	52.50
Coordination emails with GMS and counsel on entry sign costs			
Time Per Contract 06/05/2023	1.75	210.00	367.50
Teleconbs with sign contractor and GMS on impact permitting costs. Prepare cost breakdown and allocations, email to GMS and Counsel			
Time Per Contract 06/06/2023	0.25	210.00	52.50
Finalize entry sign impact cost summary, email to contractor			
Time Per Contract 06/13/2023	0.25	210.00	52.50
Coordiation call with contractor on RCID R/W permit			
Time Per Contract 06/16/2023	0.25	210.00	52.50
Coordination with Greg W at KHA on entry sign work agreement proposal			
Subtotal	4.50		945.00
Labor total	4.50		945.00

007 CDD irrigation pump upgrade

Phase Status: Closed

Billing Cutoff: 06/16/2023

Date	Units	Rate	Amount
WIP Status:			
Subtotal			0.00
total			0.00

999 Reimbursable Expenses

Phase Status: Active

Billing Cutoff: 06/16/2023

Date	Units	Rate	Amount
Expense WIP Status: Billable			
James C. Nugent			
Travel 06/16/2023			37.28
Subtotal			37.28
James C. Nugent			
Expense Report			

Invoice Supporting Detail

22234 Bonnet Creek Resort CDD General Consulting

999 Reimbursable Expenses

Phase Status: Active

Billing Cutoff: 06/16/2023

		Date	Units	Rate	Amount
Expense	WIP Status: Billable				
James C. Nugent					
Expense Report					
Mileage		06/01/2023	55.00	0.66	36.02
Mileage		06/02/2023	57.00	0.66	37.34
		Subtotal	**112.00**		**73.36**
		Expense total	**112.00**		**110.64**

1-16
310 P3 311

Donald W. McIntosh Associates, Inc.
2200 Park Avenue North · Winter Park, FL · 32789-2355
407-644-4068 · 407-644-3369 Fax

Bonnet Creek Resort CDD
George Flint
6200 Lee Vista Boulevard, Suite 300
Orlando, FL 32822

Invoice Date: July 01, 2023
Invoice No.: 44358
Project Number: 23559
For Period Through June 16, 2023

Bonnet Creek Resort CDD Consulting Engineer's Report
Per Contract Dated May 2, 2023

Email: Invoices@gmscfl.com Copy: mbyington@gmscfl.com

		Contract Amount	Work %	Completed Amount	Previously Invoiced	Amount Due
Civil Engineering						
001	Consulting engineer's report	7,500.00	100.00	7,500.00	0.00	7,500.00
	TOTAL	**$7,500.00**		**$7,500.00**	**$0.00**	**$7,500.00**
	Reimbursable Expenses			48.47	0.00	48.47
			AMOUNT DUE THIS INVOICE			**$7,548.47**

RECEIVED
JUN 30 2023

DONALD W. MCINTOSH ASSOCIATES, INC.
Due Upon Receipt

999 Reimbursable Expenses

Phase Status: Active

Billing Cutoff: 06/16/2023

		Date	Units	Rate	Amount
Expense	WIP Status: Billable				
Mileage		06/02/2023	74.00	0.66	48.47
		Total	**74.00**		**48.47**

Attendance Confirmation
for
BOARD OF SUPERVISORS

RECEIVED
JUL 11 2023

District Name: Bonnet Creek Resort CDD

Board Meeting Date: July 6, 2023

	Name	*In Attendance Please √*	*Fee Involved Yes / No*
1	Fred Sawyers	✓	Yes ($200)
2	Richard Scinta	✓	Yes ($200)
3	Becky Frasier	✓	Yes ($200)
4	Herb Von Kluge	✓	Yes ($200)
5	Randall Greene	✓	Yes ($200)

98

The supervisors present at the above referenced meeting should be compensated accordingly.

Approved for Payment:

District Manager Signature

7/6/23
Date

*****RETURN SIGNED DOCUMENT TO District Accountant*****

GMS-Central Florida, LLC
1001 Bradford Way
Kingston, TN 37763

Invoice

Invoice #: 303
Invoice Date: 7/1/23
Due Date: 7/1/23
Case:
P.O. Number:

Bill To:
Bonnet Creek Resort CDD
219 E. Livingston St.
Orlando, FL 32801

1 - 1

Description	Hours/Qty	Rate	Amount
Management Fees - July 2023 310 513 34		2,966.33	2,966.33
Website Administration - July 2023 352		67.75	67.75
Information Technology - July 2023 351		104.17	104.17
Office Supplies 57		0.42	0.42
Postage 42		8.40	8.40

RECEIVED
JUL 12 2023

Total	$3,147.07
Payments/Credits	$0.00
Balance Due	$3,147.07

GMS-Central Florida, LLC
1001 Bradford Way
Kingston, TN 37763

Invoice

Invoice #: 304
Invoice Date: 7/1/23
Due Date: 7/1/23
Case:
P.O. Number:

Bill To:
Bonnet Creek Resort CDD
219 E. Livingston St.
Orlando, FL 32801

1-1

Description	Hours/Qty	Rate	Amount
Field Management - July 2023 320 538 34		4,748.00	4,748.00

RECEIVED
JUL 12 2023

Total	$4,748.00
Payments/Credits	$0.00
Balance Due	$4,748.00

Attendance Confirmation
for
BOARD OF SUPERVISORS

RECEIVED
JUL 11 2023

District Name: Bonnet Creek Resort CDD

Board Meeting Date: July 6, 2023

	Name	*In Attendance Please √*	*Fee Involved Yes / No*
1	Fred Sawyers	✓	Yes ($200)
2	Richard Scinta	✓	Yes ($200)
3	Becky Frasier	✓	Yes ($200)
4	Herb Von Kluge	✓	Yes ($200)
5	Randall Greene	✓	Yes ($200)

93

The supervisors present at the above referenced meeting should be compensated accordingly.

Approved for Payment:

District Manager Signature

7/6/23
Date

*****RETURN SIGNED DOCUMENT TO District Accountant*****

1-102
320 538466

RCM UTILITIES, LLC
100 W. MILLS AVE
EUSTIS, FL 32726
billing@rcmutilities.com

INVOICE

BILL TO
Bonnet Creek Resort
CDD
219 E. Livingston St
Orlando, FL 32801

INVOICE # 8479
DATE 07/07/2023
DUE DATE 08/06/2023
TERMS Net 30

JOB NAME
Bonnet Creek Resort Inspection

DATE	ACTIVITY	DESCRIPTION	QTY	RATE	AMOUNT
06/22/2023	**Service Work**	Lift Station Preventative Maintenance Inspection - Quarterly - see attached report.	1	315.00	315.00

SUBTOTAL	315.00
TAX	0.00
TOTAL	315.00
BALANCE DUE	**$315.00**

RECEIVED
JUL 11 2023

RCM UTILITIES

100 W. Mills Ave
Eustis, FL 32726
352-561-2990 ext 2

1.16
52
59

CODE 3241

Lift Station Inspection Report

Date: June 22 23
(quarterly)

Customer: Bonnet Creek
14901 Chelonia Parkway Orlando, FL 32819

Lift Station: _____

Pump # 1
Elapsed Time Meter Reading:
Present: 1789.3
Previous: 1530.7 Date: 3/24/23
Total Run: 258.6

Pump # 2
Elapsed Time Meter Reading:
Present: _____
Previous: 3054.5 Date: 3/24/23
Total Run: _____

Pump Amps #1
1 17.1 2 14.1 3 17.4

Pump Amps # 2
1 _____ 2 _____ 3 _____

Wet Well Condition: Good

Float Conditions:
Off Float ✓ ok _____ n/r
Lag Float ✓ ok _____ n/r
Lead float ✓ ok _____ n/r
Alarm float ✓ ok _____ n/r

Cleaned all floats: (yes) no

Float operation and panel sequence ✓ ok _____ n/r

Alarm light and horn ✓ ok _____ n/r

Generator:
Elapsed time meter run
Present _____
Previous _____ Date: _____
Total Run: _____
Simulate power failure with generator _____ ok _____ n/r
Fuel Status generator _____, needs _____ gallon of fuel

Comments: The #2 has not been repaired

Service Tech: Seb Sandvik Signed: [signature]

Abbreviations: n/r – needs replacing/repair

Attendance Confirmation
for
BOARD OF SUPERVISORS

RECEIVED
JUL 11 2023

District Name: Bonnet Creek Resort CDD

Board Meeting Date: July 6, 2023

	Name	*In Attendance Please √*	*Fee Involved Yes / No*
1	Fred Sawyers	✓	Yes ($200)
2	Richard Scinta	✓	Yes ($200)
3	Becky Frasier	✓	Yes ($200)
4	Herb Von Kluge	✓	Yes ($200)
5	Randall Greene	✓	Yes ($200)

The supervisors present at the above referenced meeting should be compensated accordingly.

Approved for Payment:

District Manager Signature

7/6/23
Date

*****RETURN SIGNED DOCUMENT TO District Accountant*****

Attendance Confirmation
for
BOARD OF SUPERVISORS

RECEIVED
JUL 11 2023

District Name: Bonnet Creek Resort CDD

Board Meeting Date: July 6, 2023

	Name	*In Attendance Please √*	*Fee Involved Yes / No*
1	Fred Sawyers	✓	Yes ($200)
2	Richard Scinta	✓	Yes ($200)
3	Becky Frasier	✓	Yes ($200)
4	Herb Von Kluge	✓	Yes ($200)
5	Randall Greene	✓	Yes ($200)

The supervisors present at the above referenced meeting should be compensated accordingly.

Approved for Payment:

District Manager Signature

7/6/23
Date

*****RETURN SIGNED DOCUMENT TO District Accountant*****

Attendance Confirmation
for
BOARD OF SUPERVISORS

RECEIVED

JUL 11 2023

District Name: Bonnet Creek Resort CDD

Board Meeting Date: July 6, 2023

	Name	*In Attendance Please √*	*Fee Involved Yes / No*
1	Fred Sawyers	✓	Yes ($200)
2	Richard Scinta	✓	Yes ($200)
3	Becky Frasier	✓	Yes ($200)
4	Herb Von Kluge	✓	Yes ($200)
5	Randall Greene	✓	Yes ($200)

77

The supervisors present at the above referenced meeting should be compensated accordingly.

Approved for Payment:

District Manager Signature

7/6/23
Date

*****RETURN SIGNED DOCUMENT TO District Accountant*****

1-86
320 538 44150

SOLITUDE
LAKE MANAGEMENT

INVOICE

Please Remit Payment to:
Solitude Lake Management, LLC
1320 Brookwood Drive
Suite H
Little Rock, AR 72202
Phone #: (888) 480-5253
Fax #: (888) 358-0088

Invoice Number: PSI-90571
Invoice Date: 7/1/2023

Bill To: Bonnett Creek CDD
Governmental Management Services
6200 Lee Vista Blvd Suite 300
Orlando, FL 32822

Ship To: Bonnett Creek CDD
Governmental Management Services
6200 Lee Vista Blvd Suite 300
Orlando, FL 32822
United States

Ship Via		Customer ID	5006
Ship Date	7/1/2023	P.O. Number	
Due Date	7/31/2023	P.O. Date	7/1/2023
Terms	Net 30	Our Order No.	

Item/Description	Unit	Order Qty	Quantity	Unit Price	Total Price
Annual Maintenance July Billing 7/1/2023 - 7/31/2023 Bonnett Creek Irrigation Lake Bonnett Creek Irrigation Lake		1	1	234.00	234.00

RECEIVED
JUL 5 2023

Amount Subject to Sales Tax	0.00
Amount Exempt from Sales Tax	234.00

Subtotal:	**234.00**
Invoice Discount:	0.00
Total Sales Tax:	0.00
Payment Amount:	0.00
Total:	**234.00**

1-4
320 538 49

Allen E. Smith Ranch & Farming, Inc.

10524 Moss Park Road, Suite 204-511
Orlando, FL 32832
407-207-6200
office@aesrf.net

INVOICE

BILL TO
Bonnet Creek Resort Community Development District
219 E. Livingston St.
Orlando, Florida 32801

INVOICE	5649
DATE	05/31/2023
TERMS	Net 30
DUE DATE	06/30/2023

PROJECT	LOCATION	WORK DATE(S)
Clearing and Hauling Debris	Crosby Island Marsh	05/23/2023-05/25/2023

ACTIVITY	DESCRIPTION	QTY	RATE	AMOUNT
Mechanical Thinning of Pines, Vines, and Brush Cutting	Mechanical Thinning of Pines, Vines, Brush Cutting and Hauling away 10 loads of debris @ $10,200.00	1	10,200.00	10,200.00
Miscellaneous Labor	Clearing 4' around sides and 6' at front of all signs, including new signs @ $900.00	1	900.00	900.00

Thank you for your business!

BALANCE DUE **$11,100.00**

Please make checks payable to: Allen E. Smith Ranch and Farming Inc.

Please direct all billing questions to our office
(407) 207-6200

1-4
320 538 44010

Allen E. Smith Ranch & Farming, Inc.
10524 Moss Park Road, Suite 204-511
Orlando, FL 32832
407-207-6200
office@aesrf.net

INVOICE

BILL TO
Bonnet Creek Resort Community Development District
219 E. Livingston St.
Orlando, Florida 32801

INVOICE	5650
DATE	05/31/2023
TERMS	Net 30
DUE DATE	06/30/2023

PROJECT	LOCATION	WORK DATE(S)
Ag Mowing with Bushhog	Crosby Island Marsh	05/23/2023-05/25/2023

ACTIVITY	DESCRIPTION	QTY	RATE	AMOUNT
Mowing	10 hours Mowing @ $85.00 per hour	10	85.00	850.00

Thank you for your business!

BALANCE DUE **$850.00**

Please make checks payable to: Allen E. Smith Ranch and Farming Inc.

Please direct all billing questions to our office
(407) 207-6200

1-4
320538 49

Allen E. Smith Ranch & Farming, Inc.
10524 Moss Park Road, Suite 204-511
Orlando, FL 32832
407-207-6200
office@aesrf.net

INVOICE

BILL TO
Bonnet Creek Resort Community Development District
219 E. Livingston St.
Orlando, Florida 32801

INVOICE	5651
DATE	05/31/2023
TERMS	Net 30
DUE DATE	06/30/2023

PROJECT	LOCATION	WORK DATE(S)
Install Posts	Crosby Island Marsh	05/23/2023-05/25/2023

ACTIVITY	DESCRIPTION	QTY	RATE	AMOUNT
No Trespassing Signs	Install 7 new posts for "No Trespassing" signs @ $50.00 per post	7	50.00	350.00

Thank you for your business!

BALANCE DUE **$350.00**

Please make checks payable to: Allen E. Smith Ranch and Farming Inc.

Please direct all billing questions to our office
(407) 207-6200

1-28
310 513 315

LATHAM, LUNA,
EDEN & BEAUDINE,
ATTORNEYS AT LAW

201 S. ORANGE AVE, STE 1400
POST OFFICE BOX 3353
ORLANDO, FLORIDA 32801

July 5, 2023

Invoice #: 118376
Federal ID #:59-3366512

Bonnet Creek CDD
c/o GMS-CFL, LLC
219 E. Livingston Street
Orlando, FL 32801

Matter ID: 2131-001 General

For Professional Services Rendered:

6/1/2023	JAC	Travel to and participate in Board of Supervisors meeting.	2.60	$793.00
6/2/2023	JAC	Prepared task list from meeting; email to District Engineer regarding bridge agreement with park hotels.	0.30	$91.50
6/2/2023	JEL	Review and mark up proposal for Draft addendum and email regarding same.	1.40	$301.00
6/5/2023	JAC	Emails from District Engineer regarding entry sign cost allocation; review and respond with question regarding allocation of cost for erosion control.	0.20	$61.00
6/7/2023	JAC	Multiple emails regarding pavement assessment contract and MOT.	0.20	$61.00
6/14/2023	JAC	Review and comment on draft 2023 audit report.	0.40	$122.00
6/16/2023	JAC	Receive and review 2023 Engineers report for bond document compliance.	0.30	$91.50
6/22/2023	JAC	Multiple emails with District Engineer and District Manager regarding possibility of "piggybacking" on local government paving bid / contract for Chelonia Parkway work; prepared rough draft resolution for the piggyback contract and requested necessary information.	1.10	$335.50
6/29/2023	JEL	Review of Engineer report; prepare draft asphalt/paving contract.	1.00	$215.00
6/29/2023	JAC	Work on contract and resolution issues for paving contract with Middlesex; emails with District Manager and District Engineer on several issues; receive and review proposed meeting agenda.	0.50	$152.50
6/30/2023	JAC	Emails from District Engineer regarding Middlesex bid documents.	0.20	$61.00
6/30/2023	JEL	Research on 2023 legislative session; Preparation of Ethics Training Memo and Memo regarding changes to law	0.40	$86.00
Total Professional Services:			**8.60**	**$2,371.00**

For Disbursements Incurred:

6/1/2023	Payment disbursement sent to Jan Carpenter for Jan Carpenter's travel to and from Bonnet Creek CDD Board Meeting (JW Marriot) on 06.01.2023	$66.46
Total Disbursements Incurred:		**$66.46**

Total	$2,437.46
Previous Balance	$0.00

Payments & Credits

Date	Type	Notes		Amount
			Payments & Credits	$0.00
			Total Due	**$2,437.46**

RECEIVED
JUL 17 2023

1-50
320 538 473

INVOICE

INVOICE #	INVOICE DATE
ON 560990	7/19/2023
TERMS	**PO NUMBER**
Net 30	

Bill To:

Bonnet Creek Resort CDD
c/o Governmental Management Services, LLC
6200 Lee Vista Blvd
Suite 300
Orlando, FL 32822

Remit To:

Yellowstone Landscape
PO Box 101017
Atlanta, GA 30392-1017

Property Name: Bonnet Creek Resort CDD

Invoice Due Date: August 18, 2023
Invoice Amount: $13,337.52

Description	Current Amount
Damaged and declining materials Enhancement	
Landscape Enhancement	$13,337.52
Invoice Total	**$13,337.52**

Excellence
IN COMMERCIAL LANDSCAPING

RECEIVED
JUL 20 2023

Should you have any questions or inquiries please call (386) 437-6211.

Donald W McIntosh Associates Inc.
2200 Park Avenue North
Winter Park, FL 32789-2355
(407) 644-4068

31.51
600 - 538 - 607

Bonnet Creek Resort CDD
George Flint
6200 Lee Vista Boulevard, Suite 300
Orlando, FL 32822

Invoice number 44279
Date 07/01/2023

Project **22234 Bonnet Creek Resort CDD**
General Consulting

For Period Through June 16, 2023

Invoice Summary

Description	Current Billed
CDD general consulting	945.00
CDD inspections	0.00
CDD miscellaneous meetings	735.00
CDD intersection improvements	945.00
CDD irrigation pump upgrade	0.00
Reimbursable Expenses	110.64
Total	2,735.64

Professional Fee Detail

	Hours	Rate	Billed Amount
Associate	12.50	210.00	2,625.00

Reimbursable Expenses

	Units	Rate	Billed Amount
Mileage	112.00	0.655	73.36
Travel			37.28
Reimbursable Expenses subtotal			110.64

Invoice total	**2,735.64**

RECEIVED
JUN 29 2023

Invoice Supporting Detail

22234 Bonnet Creek Resort CDD General Consulting

000 CDD general consulting

Phase Status: Active

Billing Cutoff: 06/16/2023

	Date	Units	Rate	Amount
Labor WIP Status: Billable				
Associate				
James C. Nugent				
Time Per Contract	05/22/2023	0.50	210.00	105.00
Foolwo up with Terracon on berm repair proposal, call GMS about mowing on berm for topo survey				
Time Per Contract	05/24/2023	0.50	210.00	105.00
Review Terracon proposal for CIMMA berm repairs, follow up with PSI on pavement assessment proposal.				
Time Per Contract	05/25/2023	0.50	210.00	105.00
Followup with PSI on pavement assessment proposal,email to GMS when received.				
Time Per Contract	06/02/2023	0.50	210.00	105.00
Coordination with district manage and counsel on PSI and Terracon authorizations.				
Time Per Contract	06/05/2023	0.50	210.00	105.00
Assistance with Hilton bridges indemity agreement (PH&R emails, transmit documents)				
Time Per Contract	06/06/2023	0.75	210.00	157.50
Coordination with PSI on pavement assessment, research past pavement resurfacing, follow up on PSI and Terracon contracts				
Time Per Contract	06/07/2023	0.50	210.00	105.00
Coordination emails with PSI and Terracon on respective contracts for CIMMA and Chelonia pavement				
Time Per Contract	06/08/2023	0.50	210.00	105.00
Coordination with PSI on pavment assessment, research historical traffic report/ESAL estimates				
Time Per Contract	06/16/2023	0.25	210.00	52.50
Coordination calls/emails with GMS and PSI on pavement assessment				
	Subtotal	**4.50**		**945.00**
	Labor total	**4.50**		**945.00**

001 CDD inspections

Phase Status: Active

Billing Cutoff: 06/16/2023

	Date	Units	Rate	Amount
WIP Status:				
	Subtotal			**0.00**
	total			**0.00**

002 CDD miscellaneous meetings

Phase Status: Active

Billing Cutoff: 06/16/2023

	Date	Units	Rate	Amount
Labor WIP Status: Billable				
Associate				
James C. Nugent				
Time Per Contract	06/01/2023	3.50	210.00	735.00
Prep for and attend CDD board meeting				
	Subtotal	**3.50**		**735.00**

Invoice Supporting Detail

22234 Bonnet Creek Resort CDD General Consulting

002 CDD miscellaneous meetings

Phase Status: Active

Billing Cutoff: 06/16/2023

Date	Units	Rate	Amount
Labor total	3.50		735.00

005 CDD intersection improvements

Phase Status: Active

Billing Cutoff: 06/16/2023

Date	Units	Rate	Amount
Labor WIP Status: Billable			
Associate			
James C. Nugent			
Time Per Contract 05/22/2023	0.75	210.00	157.50
Review ACOE permit for entry sign impacts, call Jm W on restart of RCID permitting.			
Time Per Contract 05/23/2023	1.00	210.00	210.00
Follow up with BDA on ACOE report. Research DBS and BCR cost info for wetland impacts and erosion control CO			
Time Per Contract 05/31/2023	0.25	210.00	52.50
Coordination emails with GMS and counsel on entry sign costs			
Time Per Contract 06/05/2023	1.75	210.00	367.50
Teleconbs with sign contractor and GMS on impact permitting costs. Prepare cost breakdown and allocations, email to GMS and Counsel			
Time Per Contract 06/06/2023	0.25	210.00	52.50
Finalize entry sign impact cost summary, email to contractor			
Time Per Contract 06/13/2023	0.25	210.00	52.50
Coordiation call with contractor on RCID R/W permit			
Time Per Contract 06/16/2023	0.25	210.00	52.50
Coordination with Greg W at KHA on entry sign work agreement proposal			
Subtotal	4.50		945.00
Labor total	4.50		945.00

007 CDD irrigation pump upgrade

Phase Status: Closed

Billing Cutoff: 06/16/2023

Date	Units	Rate	Amount
WIP Status:			
Subtotal			0.00
total			0.00

999 Reimbursable Expenses

Phase Status: Active

Billing Cutoff: 06/16/2023

Date	Units	Rate	Amount
Expense WIP Status: Billable			
James C. Nugent			
Travel 06/16/2023			37.28
Subtotal			37.28
James C. Nugent			
Expense Report			

Invoice Supporting Detail

22234 Bonnet Creek Resort CDD General Consulting

999 Reimbursable Expenses

Phase Status: Active

Billing Cutoff: 06/16/2023

		Date	Units	Rate	Amount
Expense	WIP Status: Billable				
James C. Nugent					
Expense Report					
Mileage		06/01/2023	55.00	0.66	36.02
Mileage		06/02/2023	57.00	0.66	37.34
		Subtotal	**112.00**		**73.36**
		Expense total	**112.00**		**110.64**

SECTION II

Bonnet Creek Resort

Community Development District

Unaudited Financial Reporting

July 31, 2023

Table of Contents

Bonnet Creek Resort

Community Development District

Combined Balance Sheet

July 31, 2023

	General Fund	*Debt Service Fund*	*Capital Reserve Fund*	*Totals Governmental Funds*
Assets:				
Operating - Wells Fargo	$ 187,291	$ -	$ -	$ 187,291
Operating - Truist	$ 270,351	$ -	$ -	$ 270,351
Operating - Capital Projects	$ -	$ -	$ 253,575	$ 253,575
Investment - SBA Fund	$ 19,130	$ -	$ -	$ 19,130
Investment - SBA Fund Reserve	$ -	$ -	$ 393,051	$ 393,051
Series 2016				
Revenue Fund	$ -	$ 55,280	$ -	$ 55,280
Reserve Fund	$ -	$ 1,038,531	$ -	$ 1,038,531
Prepayment Fund	$ -	$ 188	$ -	$ 188
Accounts Receivable	$ 6,790	$ -	$ -	$ 6,790
Total Assets	**$ 483,562**	**$ 1,093,999**	**$ 646,626**	**$ 2,224,187**
Liabilities:				
Accounts Payable	$ 10,058	$ -	$ 46,876	$ 56,934
Retainage Payable	$ -	$ -	$ 80,975	$ 80,975
Total Liabilities	**$ 10,058**	**$ -**	**$ 127,851**	**$ 137,909**
Fund Balances:				
Restricted for:				
Debt Service - Series 2016	$ -	$ 1,093,999	$ -	$ 1,093,999
Assigned for:				
Capital Projects	$ -	$ -	$ 518,775	$ 518,775
Unassigned	$ 473,504	$ -	$ -	$ 473,504
Total Fund Balances	**$ 473,504**	**$ 1,093,999**	**$ 518,775**	**$ 2,086,278**
Total Liabilities & Fund Balance	$ 483,562	$ 1,093,999	$ 646,626	$ 2,224,187

Bonnet Creek Resort

Community Development District

General Fund

Statement of Revenues, Expenditures, and Changes in Fund Balance

For The Period Ending July 31, 2023

	Adopted Budget	Prorated Budget Thru 07/31/23	Actual Thru 07/31/23	Variance
Revenues				
Maintenance Assessments - Off Roll	$ 944,764	$ 745,278	$ 745,278	$ -
Interest Income	$ 100	$ 83	$ 731	$ 648
Reuse Water Fees - Wyndham	$ 10,000	$ 8,333	$ 11,500	$ 3,167
Reuse Water Fees - Golf Course	$ 27,000	$ 22,500	$ 22,186	$ (314)
Reuse Water Fees - Signia by Hilton & Waldorf Astoria	$ 4,000	$ 3,333	$ 3,519	$ 186
Reuse Water Fees - Marriott	$ 2,000	$ 1,667	$ 3,355	$ 1,688
Total Revenues	**$ 987,864**	**$ 781,195**	**$ 786,570**	**$ 5,375**
Expenditures:				
General & Administrative:				
Supervisor Fees	$ 8,000	$ 6,000	$ 4,200	$ 1,800
Engineering Fees	$ 20,000	$ 16,667	$ 25,982	$ (9,315)
Trustee Fees	$ 6,000	$ 6,000	$ 5,388	$ 613
Legal Services	$ 20,000	$ 16,667	$ 9,659	$ 7,008
Assessment Roll Services	$ 3,000	$ 3,000	$ 3,000	$ -
Auditing Services	$ 3,225	$ 3,225	$ 3,225	$ -
Arbitrage Rebate Calculation	$ 450	$ 450	$ 450	$ -
District Management Fees	$ 35,596	$ 29,664	$ 29,663	$ 0
Information Technology	$ 1,250	$ 1,042	$ 1,042	$ (0)
Website Maintenance	$ 813	$ 677	$ 678	$ (0)
Insurance - Professional Liability	$ 8,562	$ 8,562	$ 7,670	$ 892
Telephone	$ 100	$ 83	$ -	$ 83
Legal Advertising	$ 2,100	$ 1,750	$ 782	$ 968
Postage	$ 1,900	$ 1,583	$ 224	$ 1,360
Printing & Binding	$ 1,200	$ 1,000	$ 27	$ 973
Office Supplies	$ 300	$ 250	$ 4	$ 246
Dues, Licenses & Subscriptions	$ 175	$ 175	$ 175	$ -
Contingency	$ 2,000	$ 1,667	$ 131	$ 1,536
Total General & Administrative:	**$ 114,671**	**$ 98,461**	**$ 92,298**	**$ 6,163**

Bonnet Creek Resort

Community Development District

General Fund

Statement of Revenues, Expenditures, and Changes in Fund Balance

For The Period Ending July 31, 2023

	Adopted Budget	Prorated Budget Thru 07/31/23	Actual Thru 07/31/23	Variance
Operation and Maintenance				
Field Management	$ 56,976	$ 47,480	$ 47,480	$ -
Utility Services				
Utility Services	$ 14,000	$ 11,667	$ 10,646	$ 1,020
Street Lights - Usage	$ 4,200	$ 3,500	$ 3,487	$ 13
Street Lights - Lease & Maintenance Agreement	$ 66,000	$ 55,000	$ 35,333	$ 19,667
Water Service - Reuse Water	$ 43,000	$ 35,833	$ 35,402	$ 431
SFWMD Water Use Compliance Report	$ 5,000	$ 4,167	$ -	$ 4,167
Stormwater Control - Bonnet Creek Resort				
Oc/Dep Quarterly Well Monitoring Report	$ 1,500	$ 1,092	$ 1,092	$ -
Wetland & Upland Monitoring Services - (Bda)	$ 3,000	$ 2,500	$ 721	$ 1,779
Pond & Embankment Aquatic Treatment - (Awc)	$ 15,396	$ 12,830	$ 10,164	$ 2,666
Irrigation Pond Treatment - Solitude	$ 2,926	$ 2,438	$ 2,341	$ 97
Nuisance/Exotic Species Maintenance - (Awc)	$ 11,000	$ 9,167	$ -	$ 9,167
Stormwater Control - Crosby Island Marsh				
Nuisance/Exotic Species Maintenance - (Awc)	$ 7,500	$ 6,250	$ 2,500	$ 3,750
Nuisance/Exotic Species Maintenance - (Bda)	$ 4,500	$ 3,750	$ 2,492	$ 1,258
Embankment Mowing - (A. E. Smith)	$ 6,000	$ 5,000	$ 850	$ 4,150
Other Physical Environment				
Property Insurance	$ 12,500	$ 12,500	$ 13,268	$ (768)
Entry, Fence, Walls & Gates Maintenance	$ 24,500	$ 20,417	$ -	$ 20,417
Pump Station Maintenance	$ 4,000	$ 3,333	$ 2,919	$ 414
Pump Station Repairs	$ 7,500	$ 6,250	$ 527	$ 5,723
Landscape & Irrigation Maintenance	$ 198,000	$ 165,000	$ 165,000	$ -
Irrigation Repairs	$ 3,500	$ 2,917	$ 1,864	$ 1,053
Landscape Replacement	$ 15,000	$ 15,000	$ 16,686	$ (1,686)
Lift Station Maintenance	$ 5,000	$ 5,000	$ 5,915	$ (915)
Road & Street Facilities				
Roadway Repair & Maintenance	$ 10,400	$ 8,667	$ 2,910	$ 5,756
Highway Directional Signage - (R&M)	$ 5,000	$ 4,167	$ -	$ 4,167
Roadway Directory Signage - (R&M)	$ 5,000	$ 4,167	$ -	$ 4,167
Sidewalk/Curb Cleaning	$ 12,000	$ 10,000	$ 646	$ 9,354
Contingency	$ 16,000	$ 16,000	$ 20,556	$ (4,556)
Total Operation and Maintenance	**$ 559,398**	**$ 474,090**	**$ 382,799**	**$ 91,291**
Total Expenditures	**$ 674,069**	**$ 572,552**	**$ 475,097**	**$ 97,454**
Excess Revenues (Expenditures)	$ 313,795		$ 311,473	
Other Financing Uses				
Transfer Out - Capital Projects	$ 313,795	$ -	$ -	$ -
Total Other Financing Uses	**$ 313,795**	**$ -**	**$ -**	**$ -**
Net Change in Fund Balance	$ -		$ 311,473	
Fund Balance - Beginning	$ -		$ 162,031	
Fund Balance - Ending	$ -		$ 473,504	

Bonnet Creek Resort

Community Development District

Debt Service Fund - Series 2016

Statement of Revenues, Expenditures, and Changes in Fund Balance

For The Period Ending July 31, 2023

	Adopted Budget	Prorated Budget Thru 07/31/23	Actual Thru 07/31/23	Variance
Revenues				
Assessments - Direct Billed	$ 2,110,462	$ 2,110,462	$ 2,101,025	$ (9,437)
Interest Income	$ -	$ -	$ 39,925	$ 39,925
Total Revenues	**$ 2,110,462**	**$ 2,110,462**	**$ 2,140,950**	**$ 30,488**
Expenditures:				
Interest - 11/1	$ 433,013	$ 433,013	$ 433,013	$ -
Principal - 5/1	$ 1,235,000	$ 1,235,000	$ 1,235,000	$ -
Interest - 5/1	$ 433,013	$ 433,013	$ 433,013	$ -
Total Expenditures	**$ 2,101,025**	**$ 2,101,025**	**$ 2,101,025**	**$ -**
Excess Revenues (Expenditures)	$ 9,437		$ 39,925	
Fund Balance - Beginning	$ 12,778		$ 1,054,074	
Fund Balance - Ending	$ 22,215		$ 1,093,999	

Bonnet Creek Resort

Community Development District

Capital Projects Fund

Statement of Revenues, Expenditures, and Changes in Fund Balance

For The Period Ending July 31, 2023

	Adopted Budget	Prorated Budget Thru 07/31/23	Actual Thru 07/31/23	Variance
Revenues				
Interest Income	$ 50	$ 50	$ 10,837	$ 10,787
Total Revenues	**$ 50**	**$ 50**	**$ 10,837**	**$ 10,787**
Expenditures:				
Entry Monument	$ -	$ -	$ 70,475	$ (70,475)
Contingency	$ 840,237	$ 40	$ 40	$ -
Total Expenditures	**$ 840,237**	**$ 40**	**$ 70,515**	**$ (70,475)**
Excess Revenues (Expenditures)	$ (840,187)		$ (59,677)	
Other Financing Sources				
Transfer In - Capital Projects	$ 313,795	$ -	$ -	$ -
Total Other Financing Sources	**$ 313,795**	**$ -**	**$ -**	**$ -**
Net Change in Fund Balance	$ (526,392)		$ (59,677)	
Fund Balance - Beginning	$ 526,392		$ 578,452	
Fund Balance - Ending	$ -		$ 518,775	

Bonnet Creek Resort

Community Development District

Month to Month

	Oct	Nov	Dec	Jan	Feb	Mar	Apr	May	Jun	Jul	Aug	Sep	Total
Revenues													
Maintenance Assessments - Off Roll	$ 138,560	$ 97,631	$ -	$ 36,705	$ 199,486	$ -	$ 21,082	$ 215,109	$ -	$ 36,705	$ -	$ -	$ 745,278
Interest Income	$ 50	$ 61	$ 69	$ 73	$ 69	$ 77	$ 78	$ 84	$ 83	$ 87	$ -	$ -	$ 731
Reuse Water Fees - Wyndham	$ 1,730	$ 251	$ 1,447	$ 620	$ 811	$ 1,923	$ 939	$ 1,548	$ 1,429	$ 802	$ -	$ -	$ 11,500
Reuse Water Fees - Golf Course	$ 3,016	$ 1,179	$ 957	$ 1,430	$ 2,197	$ 3,475	$ 2,713	$ 3,916	$ 2,113	$ 1,191	$ -	$ -	$ 22,186
Reuse Water Fees - Hilton	$ 445	$ 282	$ 277	$ 244	$ 300	$ 524	$ 338	$ 428	$ 442	$ 239	$ -	$ -	$ 3,519
Reuse Water Fees - Marriott	$ 362	$ 295	$ 504	$ 325	$ 243	$ 508	$ 275	$ 268	$ 313	$ 261	$ -	$ -	$ 3,355
Total Revenues	**$ 144,164**	**$ 99,698**	**$ 3,254**	**$ 39,398**	**$ 203,105**	**$ 6,506**	**$ 25,426**	**$ 221,353**	**$ 4,381**	**$ 39,285**	**$ -**	**$ -**	**$ 786,570**
Expenditures:													
General & Administrative:													
Supervisor Fees	$ 600	$ 800	$ -	$ -	$ 600	$ -	$ 600	$ -	$ 600	$ 1,000	$ -	$ -	$ 4,200
Engineering Fees	$ 1,020	$ 938	$ -	$ 525	$ 1,073	$ 717	$ 1,771	$ 2,301	$ 9,339	$ 8,299	$ -	$ -	$ 25,982
Trustee Fees	$ -	$ 5,388	$ -	$ -	$ -	$ -	$ -	$ -	$ -	$ -	$ -	$ -	$ 5,388
Legal Services	$ 1,185	$ 1,119	$ 330	$ 92	$ 1,478	$ 1,138	$ 1,581	$ 300	$ 2,437	$ -	$ -	$ -	$ 9,659
Assessment Roll Services	$ 3,000	$ -	$ -	$ -	$ -	$ -	$ -	$ -	$ -	$ -	$ -	$ -	$ 3,000
Auditing Services	$ -	$ -	$ -	$ -	$ -	$ -	$ 3,225	$ -	$ -	$ -	$ -	$ -	$ 3,225
Arbitrage Rebate Calculation	$ -	$ 450	$ -	$ -	$ -	$ -	$ -	$ -	$ -	$ -	$ -	$ -	$ 450
District Management Fees	$ 2,966	$ 2,966	$ 2,966	$ 2,966	$ 2,966	$ 2,966	$ 2,966	$ 2,966	$ 2,966	$ 2,966	$ -	$ -	$ 29,663
Information Technology	$ 104	$ 104	$ 104	$ 104	$ 104	$ 104	$ 104	$ 104	$ 104	$ 104	$ -	$ -	$ 1,042
Website Maintenance	$ 68	$ 68	$ 68	$ 68	$ 68	$ 68	$ 68	$ 68	$ 68	$ 68	$ -	$ -	$ 678
Insurance - Professional Liability	$ 7,670	$ -	$ -	$ -	$ -	$ -	$ -	$ -	$ -	$ -	$ -	$ -	$ 7,670
Telephone	$ -	$ -	$ -	$ -	$ -	$ -	$ -	$ -	$ -	$ -	$ -	$ -	$ -
Legal Advertising	$ 782	$ -	$ -	$ -	$ -	$ -	$ -	$ -	$ -	$ -	$ -	$ -	$ 782
Postage	$ 8	$ 13	$ 43	$ 4	$ 12	$ 7	$ 20	$ 50	$ 58	$ 8	$ -	$ -	$ 224
Printing & Binding	$ 11	$ 2	$ 4	$ -	$ -	$ 7	$ -	$ 4	$ 0	$ -	$ -	$ -	$ 27
Office Supplies	$ 0	$ 1	$ 0	$ 0	$ 1	$ 0	$ 0	$ 0	$ 0	$ 0	$ -	$ -	$ 4
Dues, Licenses & Subscriptions	$ 175	$ -	$ -	$ -	$ -	$ -	$ -	$ -	$ -	$ -	$ -	$ -	$ 175
Contingency	$ 61	$ -	$ -	$ 5	$ 5	$ -	$ -	$ 21	$ -	$ 38	$ -	$ -	$ 131
Total General & Administrative:	**$ 17,650**	**$ 11,848**	**$ 3,515**	**$ 3,764**	**$ 6,306**	**$ 5,007**	**$ 10,335**	**$ 5,815**	**$ 15,573**	**$ 12,484**	**$ -**	**$ -**	**$ 92,298**

Bonnet Creek Resort

Community Development District

Month to Month

	Oct	Nov	Dec	Jan	Feb	Mar	Apr	May	Jun	Jul	Aug	Sep	Total
Operation and Maintenance													
Field Management	$ 4,748	$ 4,748	$ 4,748	$ 4,748	$ 4,748	$ 4,748	$ 4,748	$ 4,748	$ 4,748	$ 4,748	$ -	$ -	$ 47,480
Utility Services													
Utility Services	$ 789	$ 894	$ 1,092	$ 938	$ 988	$ 1,020	$ 1,162	$ 1,244	$ 1,198	$ 1,322	$ -	$ -	$ 10,646
Street Lights - Usage	$ 337	$ 337	$ 337	$ 405	$ 405	$ 399	$ 422	$ 422	$ 422	$ -	$ -	$ -	$ 3,487
Street Lights - Lease & Maintenance Agreement	$ 3,924	$ 3,924	$ 3,924	$ 3,925	$ 3,925	$ 3,927	$ 3,928	$ 3,928	$ 3,928	$ -	$ -	$ -	$ 35,333
Water Service - Reuse Water	$ 1,326	$ 2,590	$ 3,062	$ 3,043	$ 1,877	$ 2,832	$ 4,647	$ 5,785	$ 5,922	$ 4,319	$ -	$ -	$ 35,402
SFWMD Water Use Compliance Report	$ -	$ -	$ -	$ -	$ -	$ -	$ -	$ -	$ -	$ -	$ -	$ -	$ -
Stormwater Control - Bonnet Creek Resort													
Oc/Dep Quarterly Well Monitoring Report	$ -	$ 364	$ -	$ 364	$ -	$ -	$ -	$ 364	$ -	$ -	$ -	$ -	$ 1,092
Wetland & Upland Monitoring Services - (Bda)	$ -	$ -	$ -	$ -	$ -	$ -	$ -	$ 721	$ -	$ -	$ -	$ -	$ 721
Pond & Embankment Aquatic Treatment - (Awc)	$ 1,694	$ -	$ 1,694	$ -	$ 1,694	$ -	$ 1,694	$ 1,694	$ -	$ 1,694	$ -	$ -	$ 10,164
Irrigation Pond Treatment - Solitude	$ 234	$ 234	$ 234	$ 234	$ 234	$ 234	$ 234	$ 234	$ 234	$ 234	$ -	$ -	$ 2,341
Nuisance/Exotic Species Maintenance - (Awc)	$ -	$ -	$ -	$ -	$ -	$ -	$ -	$ -	$ -	$ -	$ -	$ -	$ -
Stormwater Control - Crosby Island Marsh													
Nuisance/Exotic Species Maintenance - (Awc)	$ -	$ -	$ -	$ -	$ -	$ 2,500	$ -	$ -	$ -	$ -	$ -	$ -	$ 2,500
Nuisance/Exotic Species Maintenance - (Bda)	$ -	$ -	$ -	$ 2,271	$ -	$ -	$ -	$ 221	$ -	$ -	$ -	$ -	$ 2,492
Embankment Mowing - (A. E. Smith)	$ -	$ -	$ -	$ -	$ -	$ -	$ -	$ 850	$ -	$ -	$ -	$ -	$ 850
Other Physical Environment													
Property Insurance	$ 13,268	$ -	$ -	$ -	$ -	$ -	$ -	$ -	$ -	$ -	$ -	$ -	$ 13,268
Entry, Fence, Walls & Gates Maintenance	$ -	$ -	$ -	$ -	$ -	$ -	$ -	$ -	$ -	$ -	$ -	$ -	$ -
Pump Station Maintenance	$ -	$ 856	$ -	$ -	$ 1,099	$ -	$ -	$ -	$ 964	$ -	$ -	$ -	$ 2,919
Pump Station Repairs	$ -	$ -	$ -	$ -	$ -	$ -	$ 527	$ -	$ -	$ -	$ -	$ -	$ 527
Landscape & Irrigation Maintenance	$ 16,500	$ 16,500	$ 16,500	$ 16,500	$ 16,500	$ 16,500	$ 16,500	$ 16,500	$ 16,500	$ 16,500	$ -	$ -	$ 165,000
Irrigation Repairs	$ 494	$ -	$ 493	$ -	$ -	$ -	$ -	$ 877	$ -	$ -	$ -	$ -	$ 1,864
Landscape Replacement	$ 1,375	$ -	$ -	$ -	$ 740	$ -	$ -	$ -	$ 1,233	$ 13,338	$ -	$ -	$ 16,686
Lift Station Maintenance	$ -	$ 3,160	$ 2,125	$ -	$ -	$ 315	$ -	$ -	$ 315	$ -	$ -	$ -	$ 5,915
Road & Street Facilities													
Roadway Repair & Maintenance	$ -	$ 1,212	$ 1,098	$ -	$ -	$ 600	$ -	$ -	$ -	$ -	$ -	$ -	$ 2,910
Highway Directional Signage - (R&M)	$ -	$ -	$ -	$ -	$ -	$ -	$ -	$ -	$ -	$ -	$ -	$ -	$ -
Roadway Directory Signage - (R&M)	$ -	$ -	$ -	$ -	$ -	$ -	$ -	$ -	$ -	$ -	$ -	$ -	$ -
Sidewalk/Curb Cleaning	$ -	$ -	$ -	$ -	$ -	$ 646	$ -	$ -	$ -	$ -	$ -	$ -	$ 646
Contingency	$ -	$ -	$ -	$ 968	$ -	$ -	$ -	$ 11,450	$ 8,073	$ 65	$ -	$ -	$ 20,556
Total Operation and Maintenance	**$ 44,689**	**$ 34,820**	**$ 35,307**	**$ 33,396**	**$ 32,210**	**$ 33,721**	**$ 33,862**	**$ 49,038**	**$ 43,537**	**$ 42,220**	**$ -**	**$ -**	**$ 382,799**
Total Expenditures	**$ 62,339**	**$ 46,667**	**$ 38,822**	**$ 37,160**	**$ 38,517**	**$ 38,728**	**$ 44,197**	**$ 54,853**	**$ 59,110**	**$ 54,704**	**$ -**	**$ -**	**$ 475,097**
Excess Revenues (Expenditures)	$ 81,825	$ 53,031	$ (35,568)	$ 2,239	$ 164,588	$ (32,222)	$ (18,771)	$ 166,500	$ (54,729)	$ (15,419)	$ -	$ -	$ 311,473
Other Financing Sources/(Uses)													
Transfer Out - Capital Reserve	$ -	$ -	$ -	$ -	$ -	$ -	$ -	$ -	$ -	$ -	$ -	$ -	$ -
Total Other Financing Sources (Uses)	**$ -**	**$ -**	**$ -**	**$ -**	**$ -**	**$ -**	**$ -**	**$ -**	**$ -**	**$ -**	**$ -**	**$ -**	**$ -**
Net Change in Fund Balance	$ 81,825	$ 53,031	$ (35,568)	$ 2,239	$ 164,588	$ (32,222)	$ (18,771)	$ 166,500	$ (54,729)	$ (15,419)	$ -	$ -	$ 311,473

Bonnet Creek Resort

Community Development District

LONG TERM DEBT REPORT

SERIES 2016 SPECIAL ASSESSMENT BONDS		
INTEREST RATE:	4.50%	
MATURITY DATE:	5/1/2034	
RESERVE FUND DEFINITION	50% of MADS	
RESERVE FUND REQUIREMENT	$1,038,531	
RESERVE BALANCE	$1,038,531	
BONDS OUTSTANDING - 10/31/16		$25,605,000
LESS: PRINCIPAL PAYMENT 5/1/17		($945,000)
LESS: PRINCIPAL PAYMENT 5/1/18		($990,000)
LESS: PRINCIPAL PAYMENT 5/1/19		($1,035,000)
LESS: PRINCIPAL PAYMENT 5/1/20		($1,080,000)
LESS: PRINCIPAL PAYMENT 5/1/21		($1,130,000)
LESS: PRINCIPAL PAYMENT 5/1/22		($1,180,000)
LESS: PRINCIPAL PAYMENT 5/1/23		($1,235,000)
CURRENT BONDS OUTSTANDING		**$18,010,000**

Bonnet Creek Resort

Community Development District

OFF ROLL ASSESSMENTS

FISCAL YEAR ENDING SEPTEMBER 30, 2023

Wyndham Vacation Ownership, Inc.

DATE RECEIVED	Check Num	DUE DATE	AMOUNT BILLED	NET AMOUNT RECEIVED	AMOUNT DUE	GENERAL FUND	SERIES 2016
10/6/22	2189446	10/1/22	$152,893.41	$152,893.41	$0.00	$0.00	$152,893.41
10/18/22	2190056	10/30/22	$138,560.09	$138,560.09	$0.00	$138,560.09	$0.00
2/8/23	2196244	2/1/23	$138,560.09	$138,560.09	$0.00	$138,560.09	$0.00
4/3/23	2198886	4/1/23	$588,962.49	$588,962.49	$0.00	$0.00	$588,962.49
5/10/23	2201283	4/30/23	$138,560.09	$138,560.09	$0.00	$138,560.09	$0.00
		8/1/23	$138,560.09		$138,560.09	$0.00	$0.00
			$1,296,096.26	**$1,157,536.17**	**$138,560.09**	**$415,680.27**	**$741,855.90**

Wyndham Vacation Ownership, Inc.

DATE RECEIVED	Check Num	DUE DATE	AMOUNT BILLED	NET AMOUNT RECEIVED	AMOUNT DUE	GENERAL FUND	SERIES 2016
10/4/22	315001491	10/1/22	$44,826.28	$44,826.28	$0.00	$0.00	$44,826.28
11/29/22	315001904	10/30/22	$15,623.03	$15,623.03	$0.00	$15,623.03	$0.00
1/25/23	315002385	2/1/23	$15,623.03	$15,623.03	$0.00	$15,623.03	$0.00
4/3/23	315002992	4/1/23	$172,675.85	$172,675.85	$0.00	$0.00	$172,675.85
5/3/23	315003218	4/30/23	$15,623.03	$15,623.03	$0.00	$15,623.03	$0.00
7/26/23	315003931	8/1/23	$15,623.03	$15,623.03	$0.00	$15,623.03	$0.00
			$279,994.25	**$279,994.25**	**$0.00**	**$62,492.12**	**$217,502.13**

JW Marriott

DATE RECEIVED	Check Num	DUE DATE	AMOUNT BILLED	NET AMOUNT RECEIVED	AMOUNT DUE	GENERAL FUND	SERIES 2016
10/11/22	12110347	10/1/22	$60,488.90	$60,488.90	$0.00	$0.00	$60,488.90
11/29/22	12157028	10/30/22	$21,082.41	$21,082.41	$0.00	$21,082.41	$0.00
1/18/23	12226624	2/1/23	$21,082.41	$21,082.41	$0.00	$21,082.41	$0.00
3/21/23	12307722	4/1/23	$233,009.98	$233,009.98	$0.00	$0.00	$233,009.98
4/19/23	12344858	4/30/23	$21,082.41	$21,082.41	$0.00	$21,082.41	$0.00
7/19/23	12462702	8/1/23	$21,082.41	$21,082.41	$0.00	$21,082.41	$0.00
			$377,828.52	**$377,828.52**	**$0.00**	**$84,329.64**	**$293,498.88**

G/B/H Golf Course

DATE RECEIVED	Check Num	DUE DATE	AMOUNT BILLED	NET AMOUNT RECEIVED	AMOUNT DUE	GENERAL FUND	SERIES 2016
10/25/22	1007950	10/1/22	$33,663.23	$33,663.23	$0.00	$0.00	$33,663.23
11/8/22	1007959	10/30/22	$11,731.61	$11,731.61	$0.00	$11,731.61	$0.00
2/1/23	1008194	2/1/23	$11,731.61	$11,731.61	$0.00	$11,731.61	$0.00
4/10/23	1008356	4/1/23	$129,674.50	$129,674.50	$0.00	$0.00	$129,674.50
5/3/23	1008409	4/30/23	$11,731.61	$11,731.61	$0.00	$11,731.61	$0.00
		8/1/23	$11,731.61	$0.00	$11,731.61	$0.00	$0.00
			$210,264.17	**$198,532.56**	**$11,731.61**	**$35,194.83**	**$163,337.73**

G/B/H Four Star

DATE RECEIVED	Check Num	DUE DATE	AMOUNT BILLED	NET AMOUNT RECEIVED	AMOUNT DUE	GENERAL FUND	SERIES 2016
10/25/22	1007950	10/1/22	$141,140.69	$141,140.69	$0.00	$0.00	$141,140.69
11/8/22	1007959	10/30/22	$49,193.86	$49,193.86	$0.00	$49,193.86	$0.00
2/1/23	1008194	2/1/23	$49,193.86	$49,193.86	$0.00	$49,193.86	$0.00
4/10/23	1008343	4/1/23	$543,689.68	$543,689.68	$0.00	$0.00	$543,689.68
5/3/23	1008409	4/30/23	$49,193.86	$49,193.86	$0.00	$49,193.86	$0.00
		8/1/23	$49,193.86	$0.00	$49,193.86	$0.00	$0.00
			$881,605.81	**$832,411.95**	**$49,193.86**	**$147,581.58**	**$684,830.37**
					TOTAL	**$745,278.44**	**$2,101,025.01**

SECTION III

NOTICE OF MEETING DATES
BONNET CREEK RESORT
COMMUNITY DEVELOPMENT DISTRICT

The Board of Supervisors of the **Bonnet Creek Resort Community Development District** will hold their regularly scheduled public meetings for the **Fiscal Year 2024** at **1:30 PM at the Signia by Hilton Bonnet Creek, 14100 Bonnet Creek Resort Lane, Orlando, Florida 32821** as follows:

October 5, 2023
January 4, 2024
April 4, 2024
July 4, 2024

The Board of Supervisors of the **Bonnet Creek Resort Community Development District** will hold their regularly scheduled public meetings for the **Fiscal Year 2024** at **1:30 PM at the Wyndham Bonnet Creek Resort, 9560 Via Encinas, Lake Buena Vista, FL 32830** as follows:

November 2, 2023
February 1, 2024
May 2, 2024
August 1, 2024

The Board of Supervisors of the **Bonnet Creek Resort Community Development District** will hold their regularly scheduled public meetings for the **Fiscal Year 2024** at **1:30 PM at the JW Marriott Orlando Bonnet Creek Resort, 14900 Chelonia Parkway, Orlando, Florida 32821** as follows:

December 7, 2023
March 7, 2024
June 6, 2024
September 5, 2024

The meetings are open to the public and will be conducted in accordance with the provisions of Florida Law for Community Development Districts. A copy of the meeting agenda may be obtained from the District Manager at 219 East Livingston Street, Orlando, Florida 32801. Additionally, interested parties may refer to the District's website for the latest information: www.bonnetcreekresortcdd.com.

The meetings may be continued to a date, time, and place to be specified on the record at the meeting. There may be occasions when one or more Supervisors will participate by

telephone. Any person requiring special accommodations at the meetings because of a disability or physical impairment should contact the District Office at (407) 841-5524 at least forty-eight (48) hours prior to the meeting. If you are hearing or speech impaired, please contact the Florida Relay Service 1-800-955-8770, for aid in contacting the District Office.

Each person who decides to appeal any action taken at these meetings is advised that person will need a record of the proceedings and that accordingly, the person may need to ensure that a verbatim record of the proceedings is made, including the testimony and evidence upon which such appeal is to be based.

George S. Flint
Governmental Management Services – Central Florida, LLC
District Manager

SECTION D

Bonnet Creek Resort CDD

Field Management Report

September 6th, 2023

Clayton Smith – Field Services Manager

GMS

Site Items

Landscaping Update

- After discussions with Yellowstone they have changed the account manager back to someone familiar with the site.
- Yellowstone has also replaced the single onsite porter with two porters who will be onsite 40 hours+ each week.
- We have seen a major turn around in the level of service because of these changes.
- Approved replacement sod was installed in the median.
- Approved landscape fill in was completed.
- The first half of the property received fresh mulch. The remaining areas will receive mulch the week of August 14th.
- Additional dead plants in the median were removed and inventoried. Currently awaiting proposal for the additional plant replacements.

Site Items

Entry Monument Update

- Met with the contractor and district engineer to review the approved plans for the entry monument changes.
- 4 of the palm trees and sections of the viburnum hedges will be relocated closer to the monument. Any irrigation from these areas will be moved back to district property.
- Area has been staked to prepare for the upcoming enhancements.
- Landscaper is keeping the area detailed in the meantime.

Completed

Berm Leak Repair

- A county potable water utility on the Berm across I-4 was noticed to be leaking.
- This was reported to the county who repaired the off-site berm leak.

Site Items

Bridge Pressure Washing

- The bridge was in need of pressure washing.
- This work was completed and bridge area was cleared of dirt and debris.

Curb Cleaning

- Landscapers and GMS staff are cleaning the curbs of built-up sediment.
- The construction projects are causing some sediment build-up in certain curb areas.
- Looking into options for a regular street sweeping.

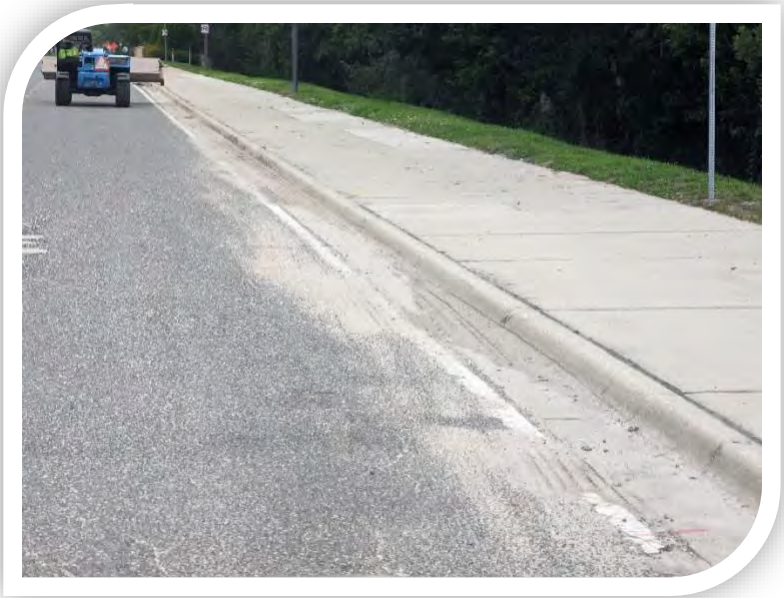

In Progress

Storm Update - Idalia

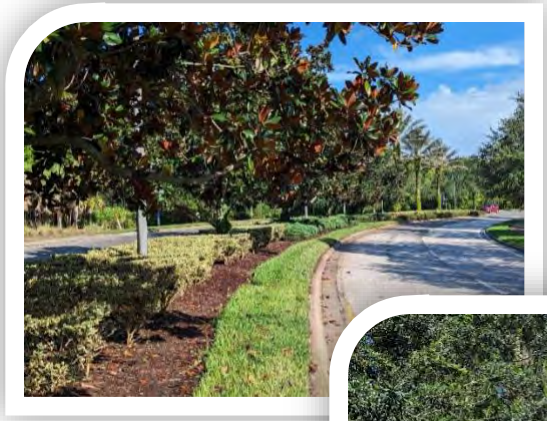

- Overall impacts to the site were minimal.
- We have taken steps to prepare the site for storm season over the last couple months.
- Stormwater inlets and outfalls were cleared, bamboo was trimmed up, palms trimmed, etc.

Conclusion

For any questions or comments regarding the above information, please contact me by phone at 407-201-1514, or by email at csmith@gmscfl.com. Thank you.

Respectfully,

Clayton Smith

SECTION I

Proposal #341372
Date: 08/17/2023
From: Joshua Cochran

Proposal For

Bonnet Creek Resort CDD
c/o Governmental Management Services, LLC
6200 Lee Vista Blvd
Suite 300
Orlando, FL 32822

main:
mobile:

Location

Chelonia Pkwy
Orlando, FL 32821

Property Name: Bonnet Creek Resort CDD

Juniper Removal and Replacement 7 Gallon Material

Terms: Net 30

DESCRIPTION	QUANTITY	AMOUNT
General Labor	24.00	$1,627.18
Juniper - 7 Gal	90.00	$6,428.48

Client Notes

See Site Audit for Specifics on location. Location is near the curve on Bonnet Creek near where the Waldorf keeps its sand.

Removal of Juniper from Magnolia tree to the Jack Frost. A portion of this area has been removed as it was dead. This proposal is to remove the remainder of thin Juniper in this area and replace with new 7 Gal Juniper.

SUBTOTAL	$8,055.66
SALES TAX	$0.00
TOTAL	$8,055.66

Signature

x

Signature above authorizes Yellowstone Landscape to perform work as described above and verifies that the prices and specifications are hereby accepted. All overdue balances will be charge a 1.5% a month, 18% annual percentage rate.
Limited Warranty: All plant material is under a limited warranty for one year. Transplanted plant material and/or plant material that dies due to conditions out of Yellowstone Landscape's control (i.e. Acts of God, vandalism, inadequate irrigation due to water restrictions, etc.) shall not be included in the warranty.

Contact

Print Name: _____

Title: _____

Date: _____

Assigned To

Joshua Cochran

Office:
jcochran@yellowstonelandscape.com

Proposal #341370
Date: 08/17/2023
From: Joshua Cochran

Proposal For

Bonnet Creek Resort CDD
c/o Governmental Management Services, LLC
6200 Lee Vista Blvd
Suite 300
Orlando, FL 32822

main:
mobile:

Location

Chelonia Pkwy
Orlando, FL 32821

Property Name: Bonnet Creek Resort CDD

Juniper Removal and Replacement

Terms: Net 30

DESCRIPTION	QUANTITY	AMOUNT
General Labor	24.00	$1,627.18
Juniper - 3 Gal	120.00	$2,399.96

Client Notes

See Site Audit for Specifics on location. Location is near the curve on Bonnet Creek near where the Waldorf keeps its sand.

Removal of Juniper from Magnolia tree to the Jack Frost. A portion of this area has been removed as it was dead. This proposal is to remove the remainder of thin Juniper in this area and replace with new 3 Gal Juniper.

SUBTOTAL	$4,027.14
SALES TAX	$0.00
TOTAL	$4,027.14

Signature

x

Signature above authorizes Yellowstone Landscape to perform work as described above and verifies that the prices and specifications are hereby accepted. All overdue balances will be charge a 1.5% a month, 18% annual percentage rate.
Limited Warranty: All plant material is under a limited warranty for one year. Transplanted plant material and/or plant material that dies due to conditions out of Yellowstone Landscape's control (i.e. Acts of God, vandalism, inadequate irrigation due to water restrictions, etc.) shall not be included in the warranty.

Contact

Print Name: _____

Title: _____

Date: _____

Assigned To

Joshua Cochran

Office:
jcochran@yellowstonelandscape.com

SECTION II

This item will be provided under separate cover

SECTION III

Traffic Control Devices, Inc.
Altamonte Springs, FL.

TRANSMITTAL NOTICE

Job No.: **22012000**

Project: Disney Bonnet Creek Resort-Offsite Way0finding Signs R1
Transmittal No.: 3
Location: Bonnet Creek Resort, Orlando FL
Sheet: of
Work: Signing
Date: 7/11/2023

To: GMS- Central Florida
219 E. Livingston St
Orlando Florida 32801
Attn; Clayton Smith

Items Listed are Being Sent:
-Enclosed
-Under Separate Cover
X **-via** Email

We are transmitting the following to you:

-Plans
-Specifications
-Sample
-Prints
X -Shop Drawings
-Quotation
-Literature
-Technical Data
X -Submittal

If the following items are not received, or are not listed, please notify us at once.

Item	Qty	Drawing Number	Date	Description	Status
1	1	N/A	7/11/23	Revised Signs Shop Darwings	C,E,F

Status Code:
A. Approved
AN. Approved as Noted
C. Submitted for Approval
D. Corrected & Re-submitted
E. For Your Files
F. Refer to Remarks

Remarks: 1.Please place conractors stamp prior to submittal
2.Please return one copy for our use

Reply To: **Eric Schultze**

Mailing: **P.O. Box 150418**
Altamonte Springs, FL 32715-0418

Shipping: **242 N. Westmonte Drive**
Altamonte Springs, FL 32714
407-869-5300

Very Truly Yours,
By: *Paloma K. Estrada*
Traffic Control Devices, Inc.

7415 Lindsey Road
Little Rock, AR 72206
501-490-4242

Signs Type H Assemblies

Sign Sheet #: B01-B02

Bonnet Creek

Interstate SignWays

Job #: 4973

.125 Digital Printed Disney Signs

Drawings Prepared For: Traffic Control Devices

Drawn By: Tad Danchenko

County: Disney

PO: 86200

Checked for Submittal: 7/11/2023Tad

GENERAL NOTES

1. 1/8" Aluminum panel with reflective vinyl graphics first surface.
2. Sign panels mount to support tube through aluminum Z-Bar with flathead countersunk bolts and U-bolt fasteners. Flathead bolts patched with reflective vinyl on sign face.
3. 6" Square tube with welded cap and paint finish.
4. 12" Diameter schedule 40 PVC tube with paint finish. Painted 1/2" thick solid core, Type I PVC collar routed to fit between steel column and PVC pipe. Glue to PVC pipe with PVC cement.
5. Sign mounts to foundation through bolt plate and connectors per F-DOT 700 standard hardware and specifications indexes.
6. Vendor to supply complete shop drawings for review prior to production.
7. WDI to review copy & layouts for submitted signs.

COLOR SCHEDULE

C-01	MP03597 - Indigo Semi-Gloss
C-02	MP12106 - Fordson Blue Semi-Gloss
C-03	MP08091 - Yellow Blast Semi-Gloss

MATERIAL SCHEDULE

M-01	To Match Navy Blue | C:100, M:90, Y:50, K:0 3M Diamond Grade Reflective Sheeting 4090DS
M-02	To Match Blue | C:100, M:50, Y:25, K:0 3M Diamond Grade Reflective Sheeting 4090DS
M-03	To Match Yellow | C:0, M:25, Y:100, K:0 3M Diamond Grade Reflective Sheeting 4090DS
M-04	To Match White | C:0, M:0, Y:0, K:0 3M Diamond Grade Reflective Sheeting 4090DS

TYPEFACE SCHEDULE

Destination Copy: **Expressway Bold**

Directional Copy: **Expressway ExtraBold**

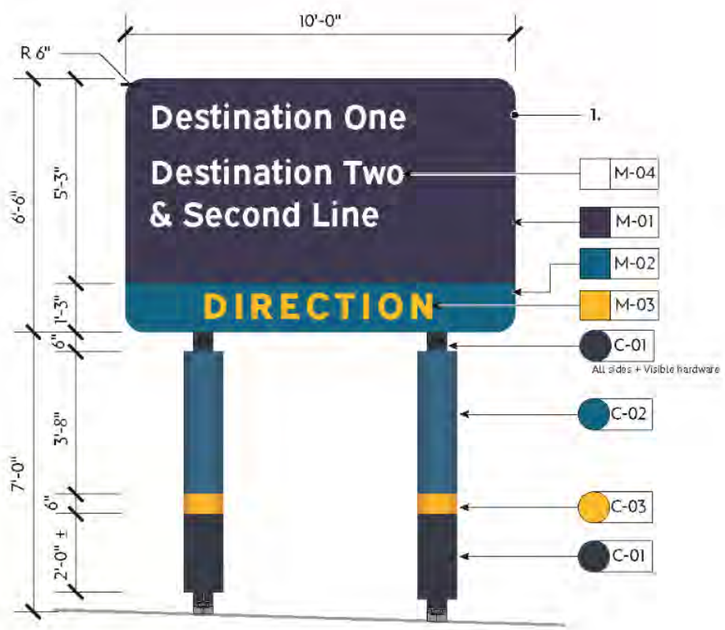

Front View - Typical
Scale: 1/4"=1'-0"
1 H-TYPE-1.00

Side View - Typical
Scale: 1/4"=1'-0"
2 H-TYPE-1.00

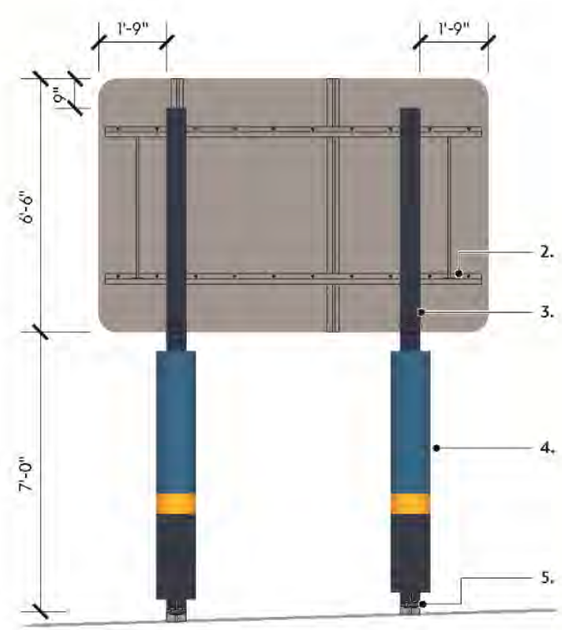

Back View - Typical
Scale: 1/4"=1'-0"
3 H-TYPE-1.00

GENERAL NOTES

1. Adjustments may be made to text size and spacing if critical. All changes must be notated and submitted to WDI for approval.
2. Type H1 signs may contain three (3) destinations maximum unless additionally approved.
3. WDI to review copy & layouts for submitted signs.

TYPEFACE SCHEDULE

Destination Copy: **Expressway Bold**

Directional Copy: **Expressway ExtraBold**

Typical Sign Panel Layout

Scale: 3/4"=1'-0"

1 H-TYPE-1.01

Job Number: 4973	Sign#: RIGHT LANE 0	Sign Type: .125 INCR	Border Width	Interstate Highway Sign Corp.
State: DI	Sheet #: B01 Break 2 0	Book #:	Radii:	7415 Lindsey Road
Item: TYPE H	Quantity: 1 Post Clip Qty 0	Wind Zone:	Qty: 0	Little Rock, AR 72206
Project: BONNET CREEK	Supports: W6X12	Sign Width: 120.00	Extra: 0.00	Phone# (501)490-3828
County: DISNEY	Mounting: GM	Sign Height: 78.00	Corner Radii: 6"	email tdanchenko@interstatesigns.com
Customer: TRAFFIC CONTROL DEVICES	Attach To:	Sq. Ft.: 65.00	Margin: 0.00	Drawn By: TAD

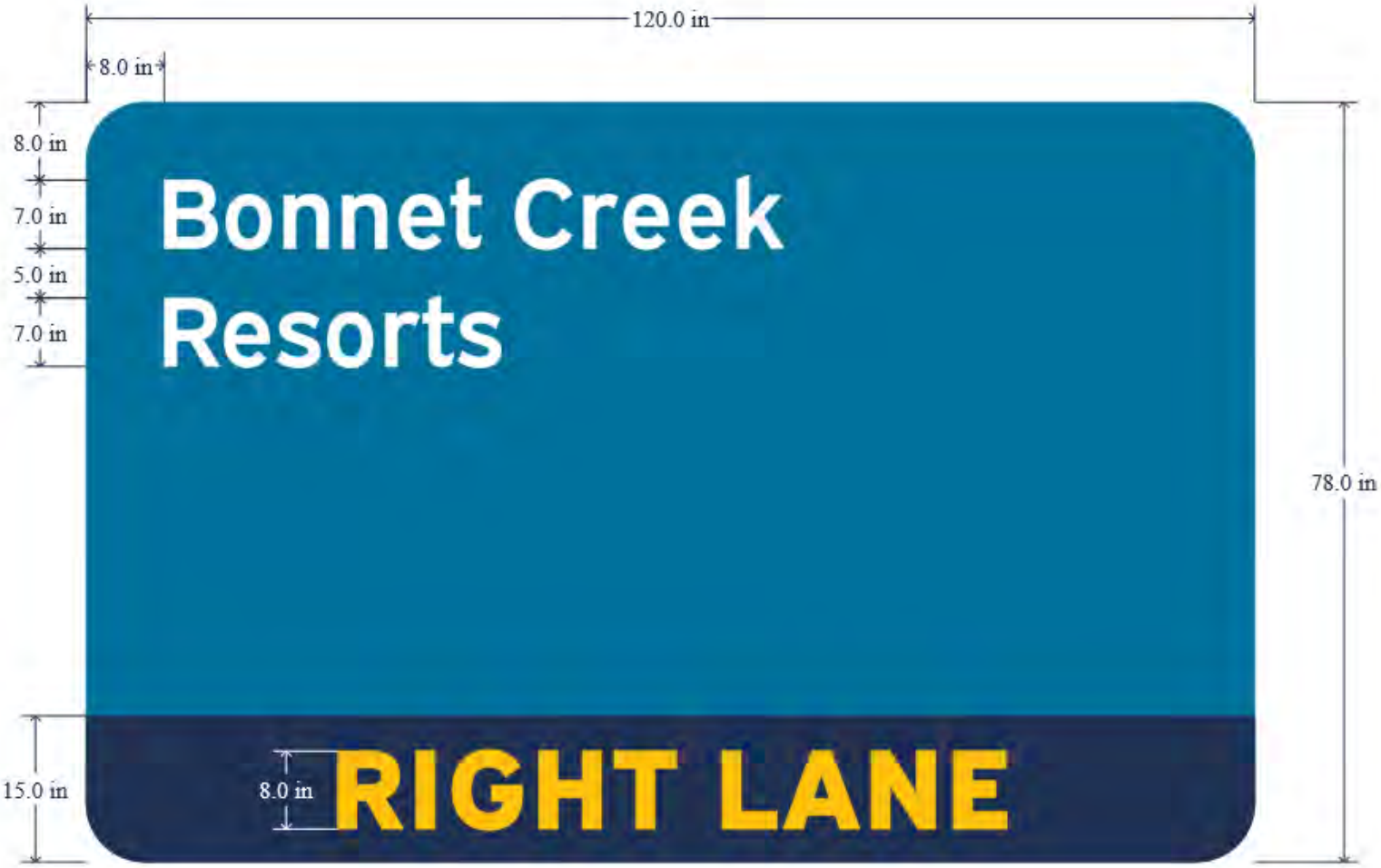

Job Number: 4973	Sign#: LEFT LANE 0	Sign Type: .125 INCR	Border Width	Interstate Highway Sign Corp.
State: DI	Sheet #: B02 Break 2 0	Book #:	Radii:	7415 Lindsey Road
Item: TYPE H	Quantity: 1 Post Clip Qty 0	Wind Zone:	Qty: 0	Little Rock, AR 72206
Project: BONNET CREEK	Supports: W6X12	Sign Width: 120.00	Extra: 0.00	Phone# (501)490-3828
County: DISNEY	Mounting: GM	Sign Height: 78.00	Corner Radii: 6"	email tdanchenko@interstatesigns.com
Customer: TRAFFIC CONTROL DEVICES	Attach To:	Sq. Ft.: 65.00	Margin: 0.00	Drawn By: TAD

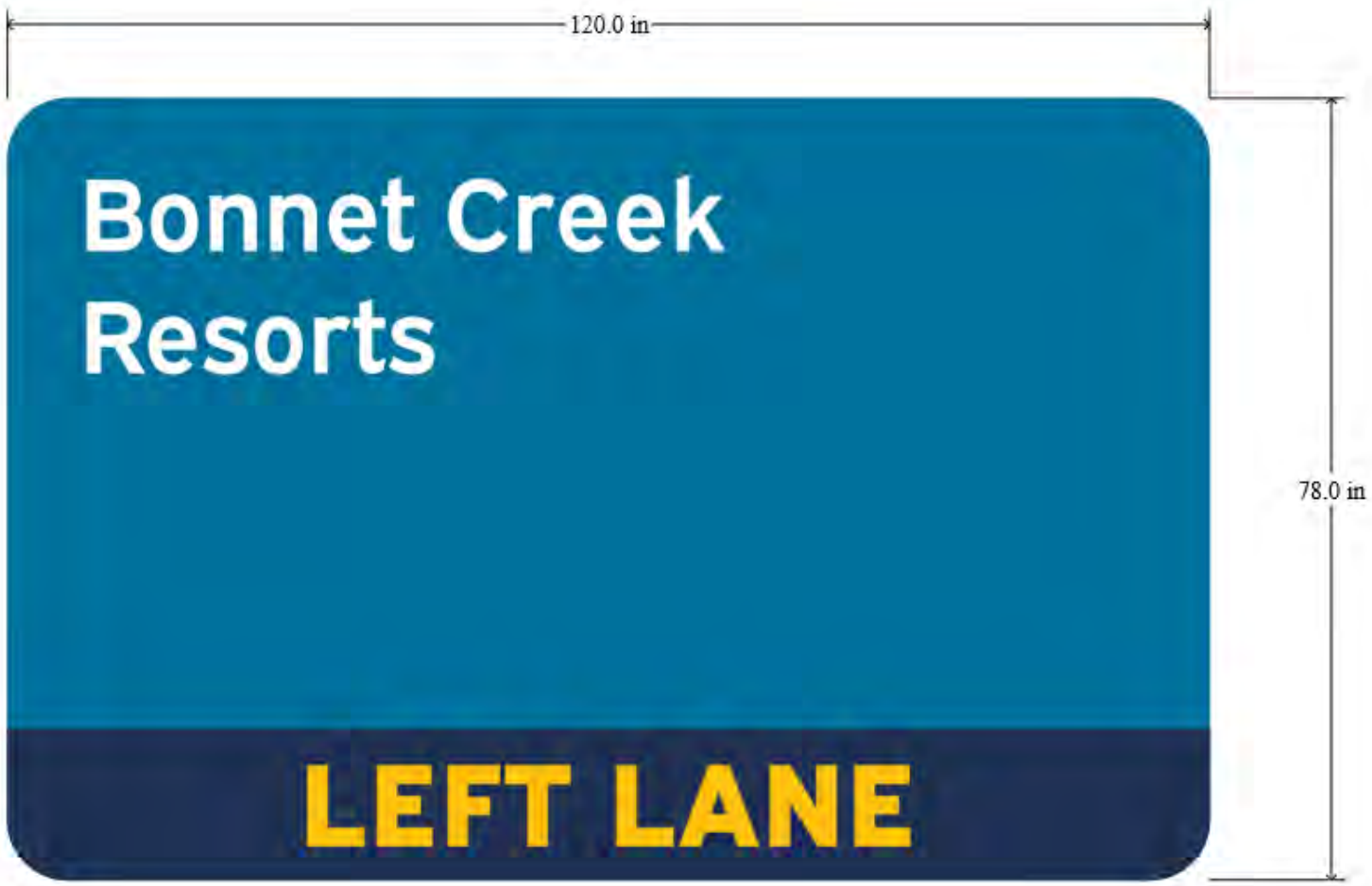

Disney H-1 Bill of Materials				
Parts BY: Tad			REV: 2023 Style Guide	
ITEM#	PARTS FOR/ SOURCE	QTY	PART NO.	DESCRIPTION/ CUTLIST
1	Sign Face From 4 foot metal 6.5 lf	26 s.f.	6125000	.125" 6061-T6 alum. 1 @ 78" x 48"
2	Sign Face From 3 foot metal 6.5 lf	39 s.f.	6125000	.125" 6061-T6 alum. 2 @ 78" x 36"
3	Zee bar for sign face	19.33 l.f.	11005000	1-3/4" x 3/16" aluminum zee bar 2 @ 116"
4	Splice plates for vertical seams	4 l.f.	51250400	4" aliminum splice plate 2 @ 78"
5	Post	25.5 l.f.		W6x12" beam 2 @ 153"
6	Stub	6 l.f.		W6x12" beam 2 @ 36"
7	Breakaway assembly for W6x12 beam	4 ea		W6x12 breakaway assembly FDOT spec 4 ea
8	8" pvc tube From 20 ft standard tube	4 l.f.	274508	12" diameter schedule 40 PVC. 2 @ 48"
9	PVC/Post Spacer From 4' x 8' standard sheet	2 s.f.	272008	12" diameter Sintra spacer. 4 ea
10	Epoxy for spacer 1 tube 375 ml	1 ea	4711250	Lord 406 Acrylic Adhesive 1 ea
11	Zee bar to post assembly	8 ea	ASSEMFLGMMTDHDW	FDOT Ground mounted sign hardware 8 ea
12	Zee bar to sign assembly	116 ea	ASSEMFL1/4C/S-LW	1/4" COUNTERSUNK SCREW Assem 116 ea
13	Sign Face sheeting	65 s.f.	40904800	DG3 sheeting digital print
14	Sign Face laminate	65 s.f.	3911704800	Clear UV laminate
15	Fuse plate assembly	2 ea		fuse plate assembly for W6x12 2 ea
16	PVC to Post - Bolt	1 ea.	4008201095	1/2" x 13 1/2" S.S. hex head bolt. 1 ea
17	PVC to Post - Washer	2 ea.	4208201035	1/2" S.S. flat washer 2 each
18	PVC to Post - Nut	1 ea.	4308201035	1/2" S.S. lock nut 1 ea
19	PVC primer	1/4 gal	74 777SP	Matthews Tie Bond Adhesion Promoter
20	PVC paint	1/4 Gal	MP03597	Matthews Indigo Blue Semi Gloss
21	PVC paint	1/4 Gal	MP12106	Matthews Fordson Blue Semi Gloss
22	PVC paint	1/8 Gal	MP08091	Matthews Yellow Blast Semi Gloss
23	Post primer	1/4 Gal	274 908SP/01	Matthews white primer
24	Post and head paint	1/4 Gal	MP03597	Matthews Indigo Blue Semi Gloss
25	Paint reducer	1/8 gal	6379sp	Matthews reducer
26	Paint catalyst	1/8 gal	43 999sp	Matthews catalyst

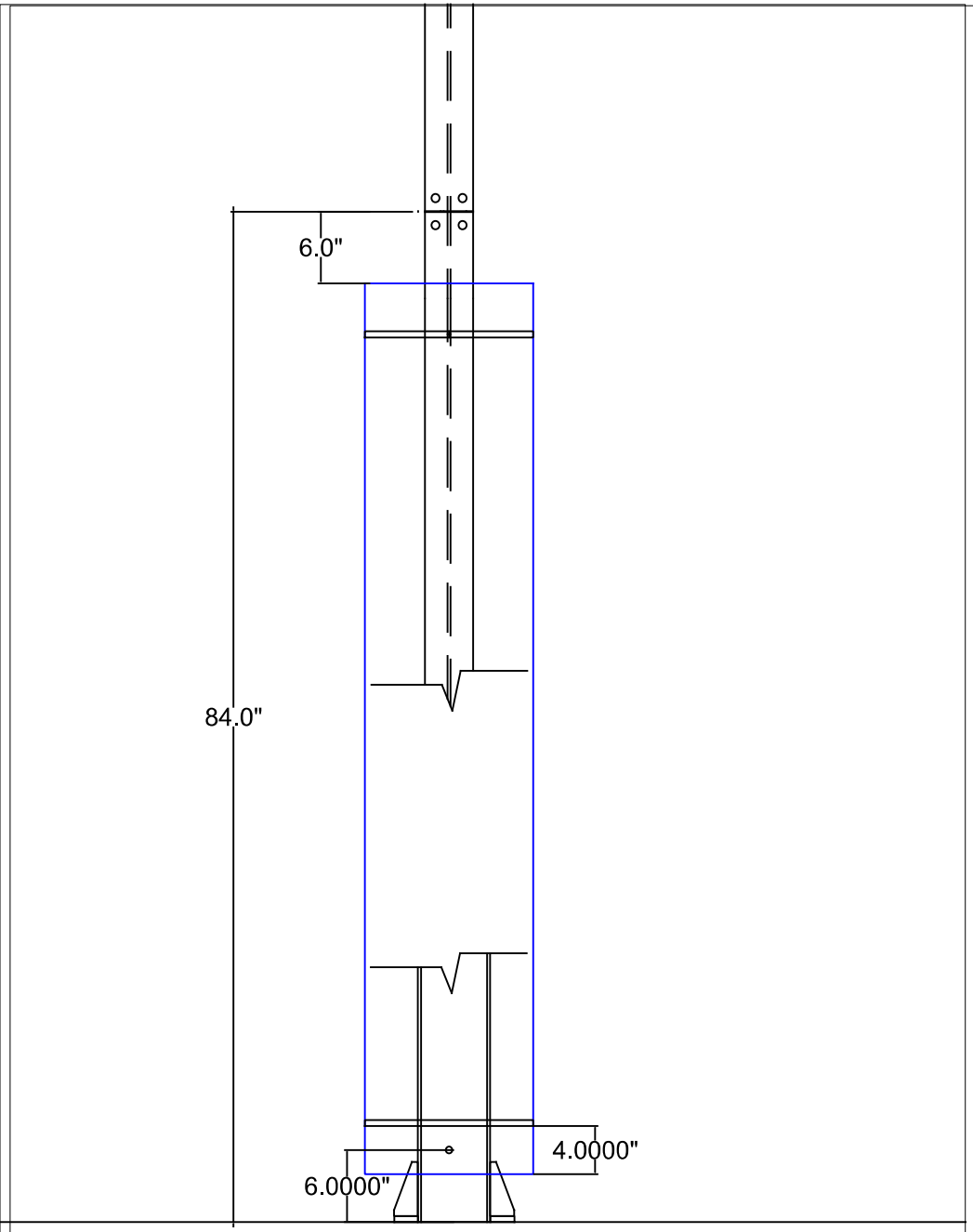

PVC placement on beam

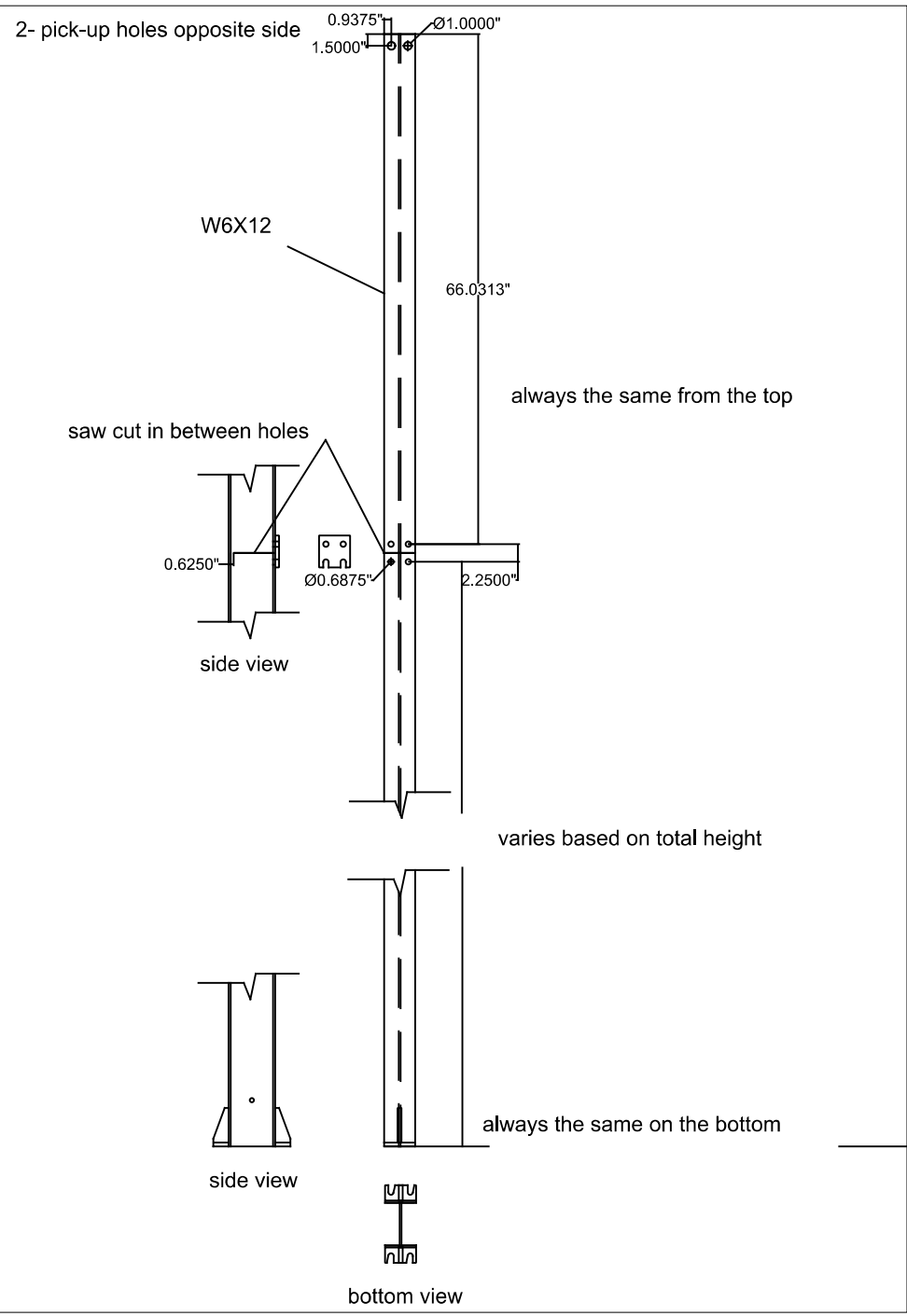

7415 Lindsey Road
Little Rock, AR 72206
501-490-4242

INTERSTATE SIGNWAYS

Signs Type E Assemblies

Sign Sheet #: C01-C02

Bonnet Creek

Interstate SignWays

Job #: 4973

.125 Digital Printed Disney Signs

Drawings Prepared For: Traffic Control Devices

Drawn By: Tad Danchenko

County: Disney

PO: 86200

Checked for Submittal: 7/10/2023Tad

Signs will fabricate to Disney 2023 Style Guidel for Type E signs except for: No mouse ears instead an arrow disk will be installed on the face of the sign with counter sunk hardware.

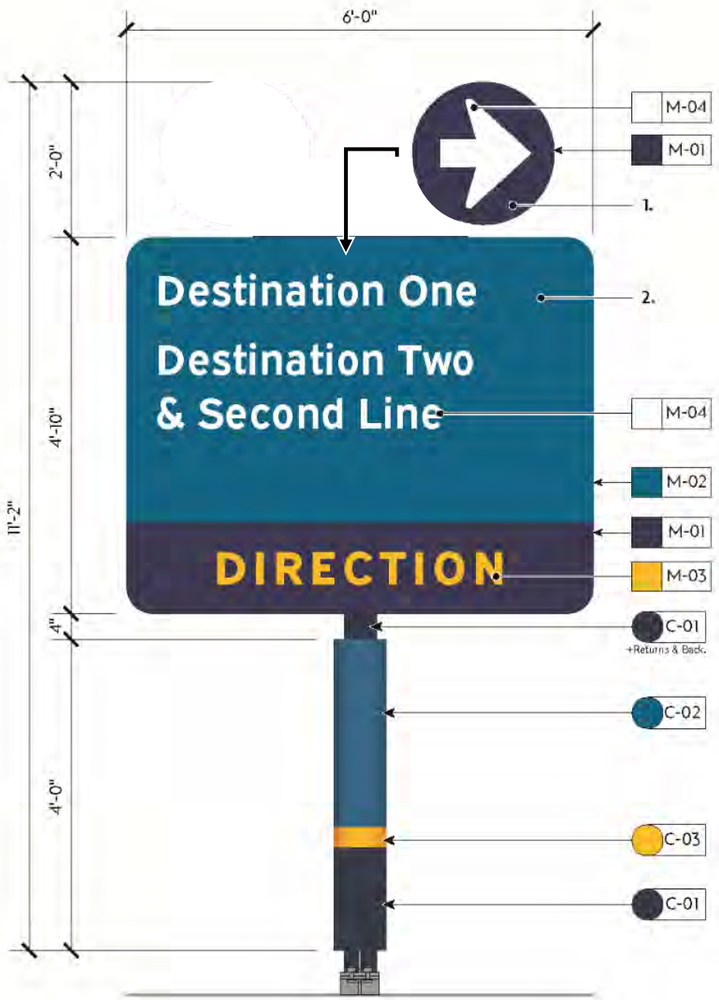

Front View - Typical
Scale: 1/2"=1'-0"
1 E-TYPE-1.00

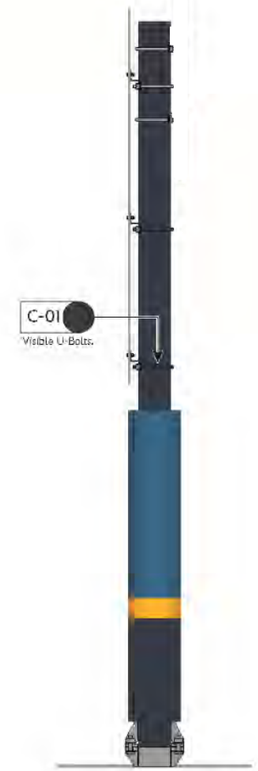

Side View - Typical
Scale: 1/2"=1'-0"
2 E-TYPE-1.00

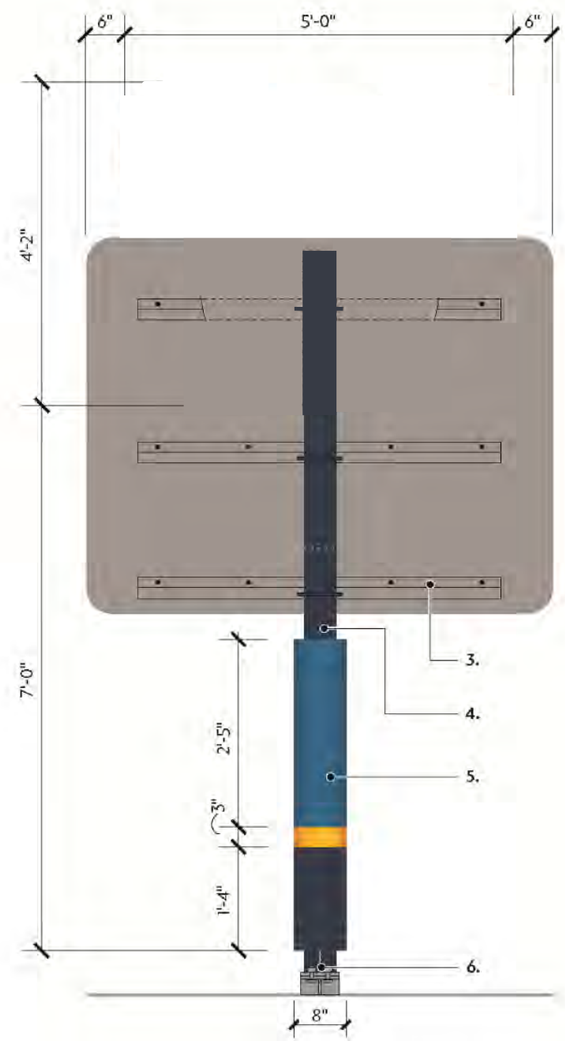

Back View - Typical
Scale: 1/2"=1'-0"
3 E-TYPE-1.00

GENERAL NOTES

1. 1/8" aluminum panel with reflective vinyl graphics applied first surface.
2. 1/8" Aluminum panel with reflective vinyl graphics applied first surface.
3. Sign panels mount to support tube through aluminum Z-Bar with flathead countersunk bolts and U-bolt fasteners. Flathead bolts patched with reflective vinyl on sign face.
4. 5" Round pipe with welded cap and paint finish.
5. 8" Round PVC Tube with caps and paint finish.
6. Sign mounts to foundation through bolt plate and connectors per F-DOT 700 standard hardware and specifications indexes.
7. Vendor to supply complete shop drawings for review prior to production.
8. WDI to review copy & layouts for submitted signs.

COLOR SCHEDULE

C-01	MP03597 - Indigo Semi-Gloss
C-02	MP12106 - Fordson Blue Semi-Gloss
C-03	MP08091 - Yellow Blast Semi-Gloss

MATERIAL SCHEDULE

M-01	To Match Navy Blue | C:100, M:90, Y:50, K:0 3M Diamond Grade Reflective Sheeting 4090DS
M-02	To Match Blue | C:100, M:50, Y:25, K:0 3M Diamond Grade Reflective Sheeting 4090DS
M-03	To Match Yellow | C:0, M:25, Y:100, K:0 3M Diamond Grade Reflective Sheeting 4090DS
M-04	To Match White | C:0, M:0, Y:0, K:0 3M Diamond Grade Reflective Sheeting 4090DS

TYPEFACE SCHEDULE

Destination Copy: **Expressway Bold**

Directional Copy: **Expressway ExtraBold**

Typical Sign Panel Layout

Scale: 1 1/2"=1'-0"

1

E-TYPE-1.01

GENERAL NOTES

1. Adjustments may be made to text size and spacing if critical. All changes must be notated and submitted to WDI for approval.
2. Type E signs may contain three (3) destinations maximum unless additionally approved.
3. WDI to review copy & layouts for submitted signs.

TYPEFACE SCHEDULE

Destination Copy: **Expressway Bold**

Directional Copy: **Expressway ExtraBold**

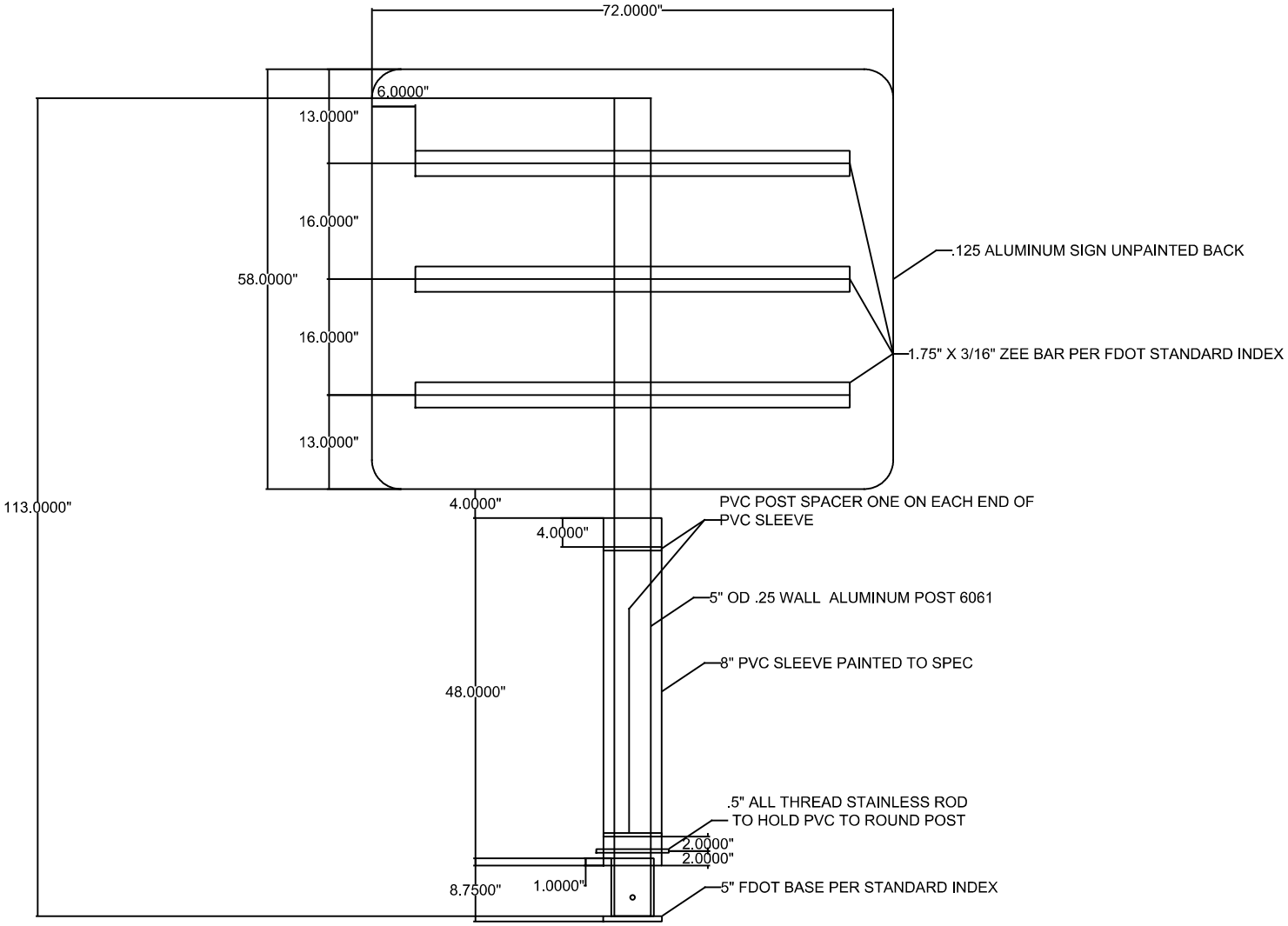
72.0000"
6.0000"
13.0000"
16.0000"
58.0000"
16.0000"
13.0000"
113.0000"
.125 ALUMINUM SIGN UNPAINTED BACK
1.75" X 3/16" ZEE BAR PER FDOT STANDARD INDEX
4.0000"
4.0000"
PVC POST SPACER ONE ON EACH END OF
PVC SLEEVE
5" OD .25 WALL ALUMINUM POST 6061
8" PVC SLEEVE PAINTED TO SPEC
48.0000"
.5" ALL THREAD STAINLESS ROD
TO HOLD PVC TO ROUND POST
2.0000"
2.0000"
8.7500"
1.0000"
5" FDOT BASE PER STANDARD INDEX

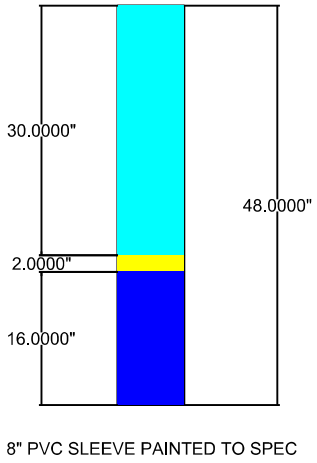
30.0000"
48.0000"
2.0000"
16.0000"
8" PVC SLEEVE PAINTED TO SPEC

Job Number: 4973	Sign#: RIGHT ARROW 0	Sign Type: FLAT .125	Border Width	Interstate Highway Sign Corp.
State: DI	Sheet #: C01 Break 2 0	Book #:	Radii:	7415 Lindsey Road
Item: TYPE E	Quantity: 3 Post Clip Qty 0	Wind Zone:	Qty: 0	Little Rock, AR 72206
Project: BONNET CREEK	Supports: NO SUPPORT	Sign Width: 72.00	Extra: 0.00	Phone# (501)490-3828
County: DISNEY	Mounting: GM	Sign Height: 58.00	Corner Radii: 4"	email tdanchenko@interstatesigns.com
Customer: TRAFFIC CONTROL DEVICES	Attach To:	Sq. Ft.: 29.00	Margin: 0.00	Drawn By: TAD

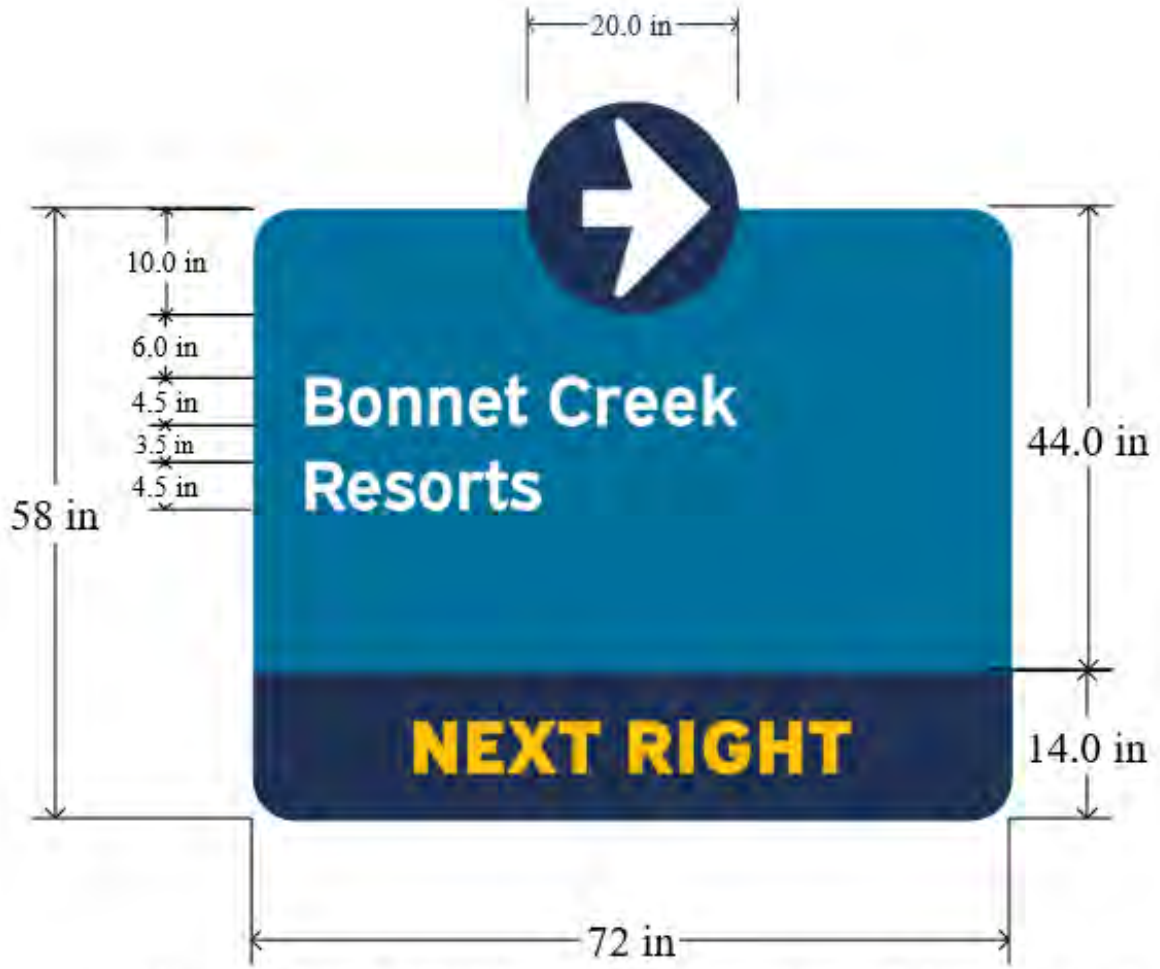

SHEETING IS DG3 DIGITAL PRINT TO APPROVED DISNEY COLORS

Job Number: 4973	Sign#: LEFT ARROW 0	Sign Type: FLAT .125	Border Width	Interstate Highway Sign Corp.
State: DI	Sheet #: C02 Break 2 0	Book #:	Radii:	7415 Lindsey Road
Item: TYPE E	Quantity: 2 Post Clip Qty 0	Wind Zone:	Qty: 0	Little Rock, AR 72206
Project: BONNET CREEK	Supports: NO SUPPORT	Sign Width: 72.00	Extra: 0.00	Phone# (501)490-3828
County: DISNEY	Mounting: GM	Sign Height: 58.00	Corner Radii: 4"	email tdanchenko@interstatesigns.com
Customer: TRAFFIC CONTROL DEVICES	Attach To:	Sq. Ft.: 29.00	Margin: 0.00	Drawn By: TAD

SHEETING IS DG3 DIGITAL PRINT TO APPROVED DISNEY COLORS